- Robust aluminium enclosure for mechanical engineering and automation technology
- Fixing options for DIN rails and mounting plates
- Usable in wide temperature area

Technical Data

Material:
DIN EN 1706 EN AC-AlSi 12 (Fe)

Painting:
powder coating

Colour:
RAL 7001, silver grey
special colour on request

Ingress protection:
IP 66 to EN 60529
higher protection on request

Impact resistance:
7 Joule to EN 60079-0

Temperature range:
PU (polyurethane) seal (std.): -40°C to +90°C
CR (chloroprene) seal: -40°C to +100°C
VMQ(silicone) seal (optional): -60°C to +130°C

Included in delivery

Aluminium enclosure consisting of lid, seal incl. captive +/- stainless steel screws, base with 2 or 4 earthing screws

Aluminium Standard

Product range

Bestell-Nr.	W x L x H (mm)	TDIN rails for terminals TS 15	TS 35	Earth rail, clamps	Mounting plate, thickness in mm [1]	External mounting brackets set [2]	External aluminium hinge pair [3], [4]	Internal hinge pair [2], [4]	Turn bolt fastener [4]
Standard enclosure									
01.05 05 03	45 x 50 x 30								
01.06 06 03	64 x 58 x 34								
01.06 10 03	64 x 98 x 34	•							
01.06 15 03	64 x 150 x 34	•							
01.06 19 03	64 x 185 x 34	•							
01.08 08 06	80 x 75 x 57	•			1,5	•			
01.08 13 06	80 x 125 x 57	•			1,5	•			
01.08 18 06	80 x 175 x 57	•			1,5	•			
01.08 25 05	80 x 250 x 52	•				•			
01.10 10 08	100 x 100 x 81	•			1,5	•	•		
01.10 16 08	100 x 160 x 81	•			1,5	•	•		
01.10 20 08	100 x 200 x 81	•			1,5	•	•		
01.12 12 08	120 x 122 x 81		•	6	1,5	•	•		
01.12 12 09	120 x 122 x 91		•	6	1,5	•	•		
01.12 22 08	120 x 220 x 81		•	13	1,5	•	•		
01.12 22 09	120 x 220 x 91		•	13	1,5	•	•		
01.12 22 12	120 x 220 x 118		•	13	1,5	•	•		
01.12 36 08	120 x 360 x 81		•	23	1,5	•	•		
01.14 14 09	140 x 140 x 91		•	6	1,5	•	•		
01.14 20 09	140 x 200 x 91		•	11	1,5	•	•		•
01.16 16 09	160 x 160 x 91		•	8	1,5	•	•	•	•
01.16 26 09	160 x 260 x 91		•	16	1,5	•	•	•	•
01.16 36 09	160 x 360 x 91		•	23	1,5	•	•	•	•
01.16 56 09	160 x 560 x 91		•	36	2,0	•	•	•	•
01.18 18 10	180 x 180 x 101		•	8	1,5	•	•	•	•
01.18 28 10	180 x 280 x 101		•	17	1,5	•	•	•	•
01.23 10 11	230 x 100 x 111		•	13	1,5	•	•	•	•
01.23 20 11	232 x 202 x 111		•	10	1,5	•	•	•	•
01.23 20 18	232 x 202 x 181		•	10	1,5	•	•	•	•
01.23 28 11	230 x 280 x 111		•	16	1,5	•	•	•	•
01.23 33 11	230 x 330 x 111		•	21	1,5	•	•	•	•
01.23 33 18	230 x 330 x 181		•	21	1,5	•	•	•	•
01.23 40 11	230 x 400 x 111		•	25	2	•	•	•	•
01.23 40 23	230 x 400 x 225		•	25	2	•	•	•	•
01.23 60 11	230 x 600 x 111		•	40	2	•	•	•	•
01.31 40 11	313 x 404 x 111		•	25	2	•	•	•	•
01.31 40 14	312 x 403 x 141		•	25	2	•	•	•	•
01.31 40 18	313 x 404 x 181		•	25	2	•	•	•	•
01.31 40 23	313 x 404 x 227		•	25	2	•	•	•	•
01.31 60 11	310 x 600 x 111		•	40	2	•	•	•	•
01.31 60 18	310 x 600 x 181		•	40	2	•	•	•	•
01.60 60 20	600 x 600 x 202		•		2,5				
Field enclosure with integrated external fastening									
01.06 12 00	64 x 115 x 34								
01.06 19 00	64 x 185 x 34								

[1]) galvanized sheet steel [2]) stainless steel [3]) diecast alu [4]) Please quote installation side A-D when ordering [5]) on request

Accessories

EMC screening (without type 01.60 60 20)
SWB/SBG/SBGL corrosion protection (RAL 5009)
Allen lid screws (without type 01.60 60 20)
Silicone lid seal up to +130°C
Sealable lid screws in steel (without type 01.60 60 20)

Terminal mounting

Make	Phoenix																		
DIN rail TS 15	X	X	X													Earthing bar 2.5 mm² with cable lug max. 10 mm²	Earthing screw M4 with cable lug max. 6 mm²	M6 with cable lug max. 35 mm²	Earth connection as required
DIN rail TS 35				X	X	X	X	X	X	X	X	X	X	X	X				
Voltage (V)	250	500	500	500	800	800	800	800	800	800	800	1000	1000	1000	1000				
Current (A)	24	24	32	17,5	24	24	32	41	57	76	125	150	232	309	415				
Nom. cross section (mm²)	2,5	2,5	4	1,5	2,5	2,5	4	6	10	16	35	50	95	150	240				
Terminal width (mm)	5,2	5,2	6,2	4,2	5,2	5,2	6,2	8,2	10,2	12,2	16	20	25	31	36				
Terminal type / Type	MBK 2,5 E	MBK 3 / E-Z	MBK 5 / E-Z	UK 1,5 N	UK 2,5 N	UK 3 N	UK 5 N	UK 6 N	UK 10 N	UK 16 N	UK 35	UKH 50	UKH 95	UKH 150	UKH 240				
01.05 05 03																			
01.06 06 03																	1		
01.06 10 03																	2		
01.06 15 03																	2		
01.06 19 03																	2		
01.08 08 06	6	6	5														2		
01.08 13 06	12	12	9														2		
01.08 18 06	25	25	21														2		
01.08 25 05	40	40	33														2		
01.10 10 08	11	11	9	14	11	11	9	7									2		
01.10 16 08	23	23	19	28	23	23	19	14									2		
01.10 20 08	30	30	25	38	30	30	25	19									2		
01.12 12 08				19	15	15	13	10	8	6						6			
01.12 12 09				19	15	15	13	10	8	6						6		4	
01.12 22 08				42	34	34	29	21	17	14						13		4	
01.12 22 09				42	34	34	29	21	17	14						13		4	
01.12 22 12				42	34	34	29	21	17	14						13		4	
01.12 36 08				76	61	61	51	39	31	26						23		4	
01.14 14 09				23	19	19	16	12	9	8						6		4	
01.14 20 09				38	30	30	25	19	15	13						11		4	
01.16 16 09				28	23	23	19	14	11	9	7					8		4	
01.16 26 09				52	42	42	35	26	21	18	14					16		4	
01.16 36 09				76	61	61	51	39	31	26	21					23		4	
01.16 56 09				123	100	100	83	63	50	42	34					36		4	
01.18 18 10				33	26	26	22	17	13	11	9					8		4	
01.18 28 10				57	46	46	38	29	23	19	15					17		4	
01.23 10 11				45	36	36	30	23								13		4	
01.23 20 11				76	62	62	52	38	15	13	10					10		4	
01.23 20 18				76	62	62	52	38	15	13	10	8				10		4	
01.23 28 11				114	92	92	76	58	46	19	15					16		4	
01.23 33 11				138	110	110	92	70	56	23	19					21		4	
01.23 33 18				138	110	110	92	70	56	23	19	14				21		4	
01.23 40 11				170	138	138	116	86	70	29	23					25		4	
01.23 40 23				170	138	138	116	86	70	29	23	18				25		4	
01.23 60 11				266	214	214	180	136	54	45	36					40		4	
01.31 40 11				258	210	210	174	132	70	58	23					25		4	
01.31 40 14				258	210	210	174	132	70	58	23	18	14			25		4	
01.31 40 18				258	210	210	174	132	70	58	23	18	14			25		4	
01.31 40 23				258	210	210	174	132	70	58	23	18	14			25		4	
01.31 60 11				399	321	321	270	204	108	90	36					40		4	
01.31 60 18				399	321	321	270	204	108	90	36	28	22			40		4	
01.60 60 20				532	428	428	360	204	162	135	108	56	22	18	15	40		4	
Field enclosure with integrated external fastening																			
01.06 12 00																			
01.06 19 00																			

Aluminium Standard

Terminal mounting

Make	Weidmüller																				
DIN rail TS 15					X	X	X	X													
DIN rail TS 35									X	X	X	X	X	X	X	X	X	X	X	X	X
Voltage (V)	400	400	400	400	400	250	250	400	500	800	800	800	1000	1000	1000	1000	1000	1000	1000	1000	1000
Current (A)	24	32	32	32	17,5	17,5	24	32	24	24	32	41	57	76	125	150	192	232	269	309	415
Nom. cross section (mm²)	2,5	4	4	4	1,5	1,5	2,5	4	2,5	2,5	4	6	10	16	35	50	70	95	120	150	240
Terminal width (mm)	35,75	38	52	92	3,5	5,1	5,1	6,1	5,1	5,1	6,1	7,9	9,9	11,9	16	18,5	20,5	27	27	32	36
Terminal type / Type	MK 3/4 (4-pole)	BK 4 (4-pole)	BK 6 (6-pole)	BK 12 (12-pole)	WDU 1,5 / R 3,5	AKZ 1,5	AKZ 2,5	AKZ 4	WDU 2,5 N	WDU 2,5	WDU 4	WDU 6	WDU 10	WDU 16	WDU 35	WDU 50 N	WDU 70 N	WDU 70 / 95	WDU 95 / 120 N	WDU 120 / 150	WDU 240
01.05 05 03	1																				
01.06 06 03		1																			
01.06 10 03			1																		
01.06 15 03				1																	
01.06 19 03				1																	
01.08 08 06					10	4	4	3													
01.08 13 06					24	14	14	11													
01.08 18 06					38	24	23	20													
01.08 25 05					59	38	38	32													
01.10 10 08					17	9	9	7	11												
01.10 16 08					34	21	20	17	24												
01.10 20 08					45	28	28	24	32												
01.12 12 08						13	12	10	13	13	11	8									
01.12 12 09						13	12	10	13	13	11	8	6								
01.12 22 08						32	32	27	33	33	27	21	16								
01.12 22 09						32	32	27	33	33	27	21	16								
01.12 22 12						32	32	27	33	33	27	21	16								
01.12 36 08						59	59	49	61	61	50	38	30								
01.14 14 09						16	16	14	16	16	13	10	8								
01.14 20 09						28	28	23	28	28	23	17	14								
01.16 16 09						20	20	17	20	20	17	13	10								
01.16 26 09						40	39	33	40	40	33	25	20								
01.16 36 09						59	59	49	61	61	50	38	30								
01.16 56 09						98	98	82	100	100	84	63	50								
01.18 18 10						24	24	20	24	24	20	15	12	10							
01.18 28 10						43	43	36	44	44	37	28	22	18							
01.23 10 11						34	33	28													
01.23 20 11						56	56	46	56	56	46	36	14	11	8						
01.23 20 18						56	56	46	56	56	46	36	14	11	8	7					
01.23 28 11						86	86	72	88	88	72	56	44	18	12						
01.23 33 11						106	106	88	108	108	90	68	54	22	15						
01.23 33 18						106	106	88	108	108	90	68	54	22	15	14					
01.23 40 11						132	132	110	136	136	114	86	68	29	19						
01.23 40 23						132	132	110	136	136	114	86	68	29	19	18					
01.23 60 11						212	210	176	216	216	180	134	54	45	30						
01.31 40 11						198	198	165	204	204	171	129	51	42	19						
01.31 40 14						198	198	165	204	204	171	129	51	42	19	18	16	14	14		
01.31 40 18						198	198	165	204	204	171	129	51	42	19	18	16	14	14		
01.31 40 23						198	198	165	204	204	171	129	51	42	19	18	16	14	14		
01.31 60 11						318	315	264	324	324	270	204	108	90	30						
01.31 60 18						318	315	264	324	324	270	204	108	90	30	28	26	20	20		
01.60 60 20						416	416	348	432	432	360	204	162	135	120	56	39	20	20	16	15
Field enclosure with integrated external fastening																					
01.06 12 00			1																		
01.06 19 00				1																	

Earthing bar and earth connection see terminal mounting Phoenix

Accessories

External brackets
set = 4 pcs

Order No.	for enclosure
10.03 11 01	01.08 08 06 - 01.10 20 08
10.03 11 02	01.12 12 08 - 01.31 60 18

Type 10.03 11 01

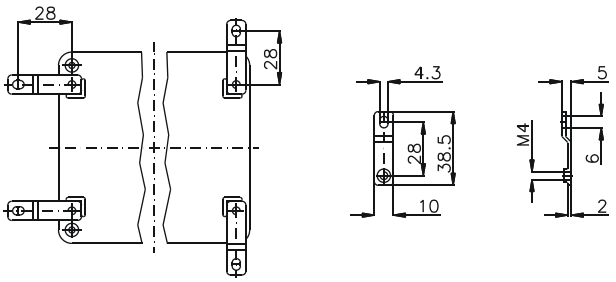

Type 10.03 11 02

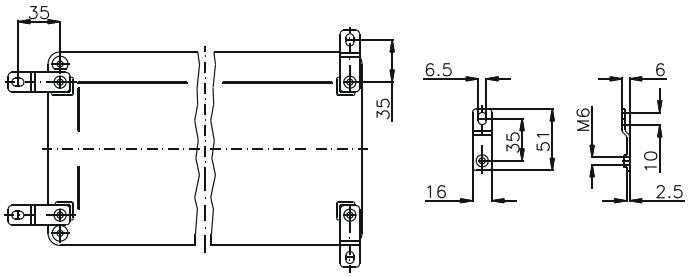

External hinge
opening angle 150°
set = 2 pcs

Order No. **10.02 70 01**

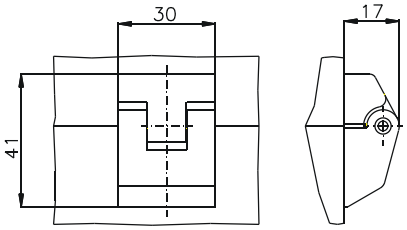

Internal hinge
opening angle 95°
set = 2 pcs

Order No. **10.02 20 01**

Type: **01.05 05 03** External dimensions: **45 x 50 x 30 mm** Weight: **91 g**

DIN rail length in mm	max. fitting length in mm	Earthing rail clamp	Mounting plate (thickness in mm)	External mounting brackets	External hinge* set	EMC version	Internal hinge* set	SWB / SBG / SBGL Corr.protection	Allen lid screws	Silicone lid seal	Sealable lid screws in steel	Turn bolt fastener
						•		•	•	•	•	

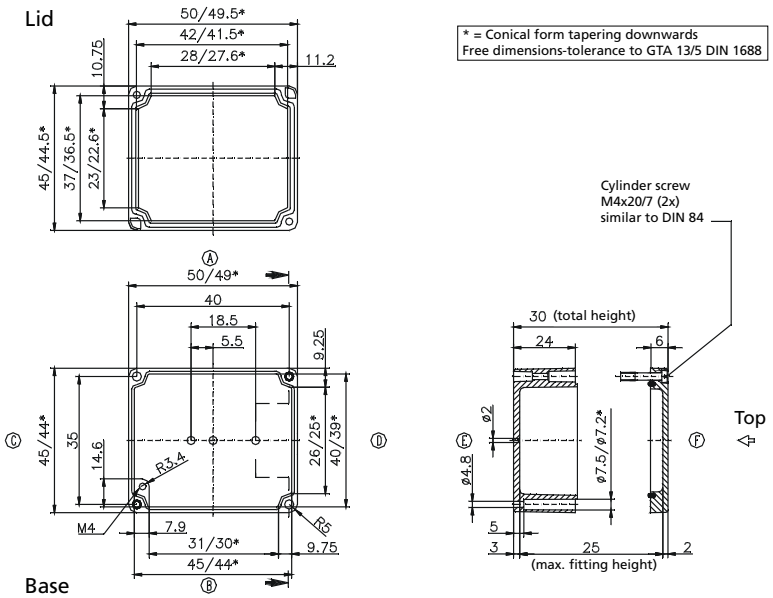

* = Conical form tapering downwards
Free dimensions-tolerance to GTA 13/5 DIN 1688

Maximum number of cable glands to **DIN 50262***

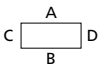

M	Corner dim.	Side A/B	Side C/D	PG	Corner dim.	Side A/B	Side C/D
12	17,25	2	1	7	17,25	2	1
16	25,30			9	21,85	1	
20	27,60			11	25,30		
25	37,95			13,5	27,60		
32	48,30			16	31,05		
40	60,95			21	37,95		
50	69,00			29	48,30		
63	74,75			36	60,95		
				42	69,00		
				48	74,75		

Type: **01.06 06 03** External dimensions: **64 x 58 x 34 mm** Weight: **165 g**

DIN rail length in mm	max. fitting length in mm	Earthing rail clamp	Mounting plate (thickness in mm)	External mounting brackets	External hinge* set	EMC version	Internal hinge* set	SWB / SBG / SBGL Corr.protection	Allen lid screws	Silicone lid seal	Sealable lid screws in steel	Turn bolt fastener
						•		•	•	•	•	

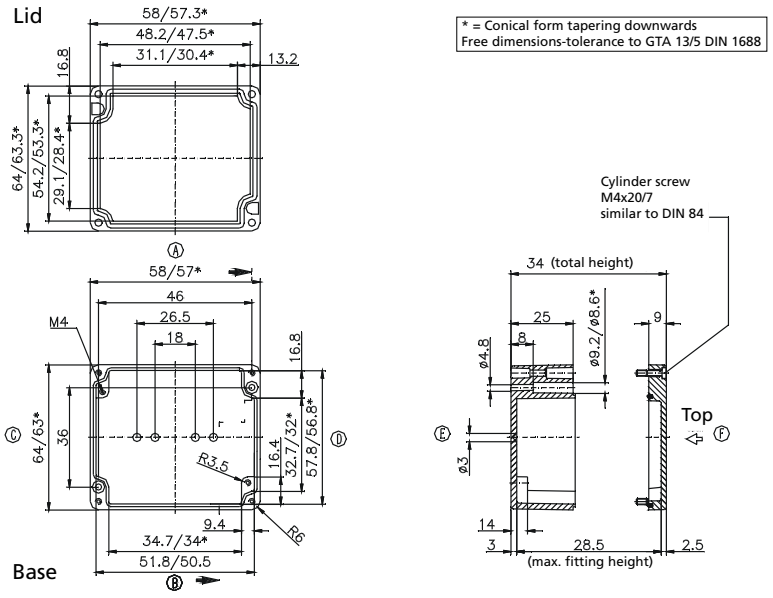

* = Conical form tapering downwards
Free dimensions-tolerance to GTA 13/5 DIN 1688

Maximum number of cable glands to **DIN 50262***

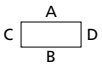

M	Corner dim.	Side A/B	Side C/D	PG	Corner dim.	Side A/B	Side C/D
12	17,25	2	1	7	17,25	2	1
16	25,30			9	21,85	1	1
20	27,60			11	25,30		
25	37,95			13,5	27,60		
32	48,30			16	31,05		
40	60,95			21	37,95		
50	69,00			29	48,30		
63	74,75			36	60,95		
				42	69,00		
				48	74,75		

* Please quote mounting side

Type: **01.06 10 03** External dimensions: **64 x 98 x 34 mm** Weight: **224 g**

DIN rail length in mm	max. fitting length in mm	Earthing rail clamp	Mounting plate (thickness in mm)	External mounting brackets	External hinge* set	EMC version	Internal hinge* set	SWB / SBG / SBGL Corr.protection	Allen lid screws	Silicone lid seal	Sealable lid screws in steel	Turn bolt fastener
TS 15												
87,5						•		•	•	•	•	

Maximum number of cable glands to **DIN 50262***

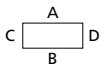

M	Corner dim.	Side A/B	Side C/D	PG	Corner dim.	Side A/B	Side C/D
12	17,25	4	1	7	17,25	4	1
16	25,30			9	21,85	3	1
20	27,60			11	25,30		
25	37,95			13,5	27,60		
32	48,30			16	31,05		
40	60,95			21	37,95		
50	69,00			29	48,30		
63	74,75			36	60,95		
				42	69,00		
				48	74,75		

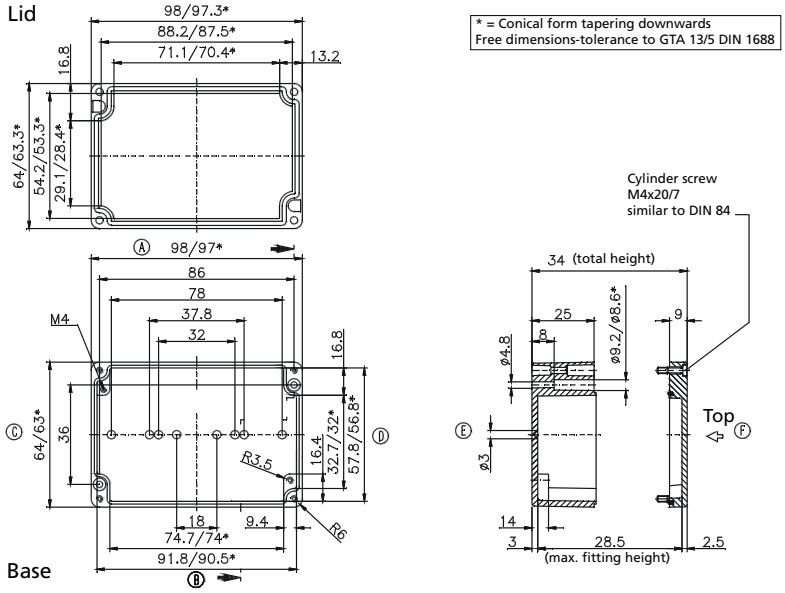

Type: **01.06 12 00** External dimensions: **64 x 115 x 34 mm** Weight: **290 g**

DIN rail length in mm	max. fitting length in mm	Earthing rail clamp	Mounting plate (thickness in mm)	External mounting brackets	External hinge* set	EMC version	Internal hinge* set	SWB / SBG / SBGL Corr.protection	Allen lid screws	Silicone lid seal	Sealable lid screws in steel	Turn bolt fastener
						•		•	•	•	•	

Maximum number of cable glands to **DIN 50262***

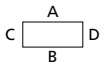

M	Corner dim.	Side A/B	Side C/D	PG	Corner dim.	Side A/B	Side C/D
12	17,25	5	1	7	17,25	5	1
16	25,30			9	21,85	4	1
20	27,60			11	25,30		
25	37,95			13,5	27,60		
32	48,30			16	31,05		
40	60,95			21	37,95		
50	69,00			29	48,30		
63	74,75			36	60,95		
				42	69,00		
				48	74,75		

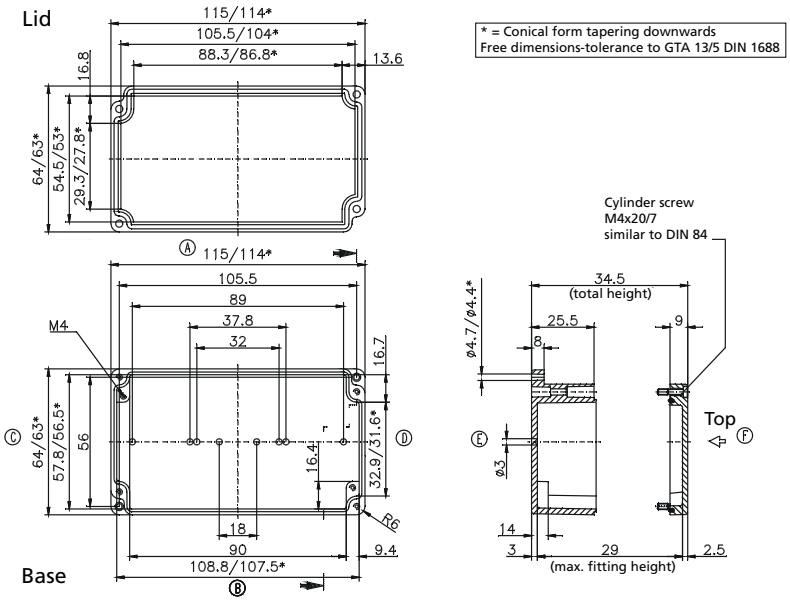

* Please quote mounting side

Type: **01.06 15 03** External dimensions: **64 x 150 x 34 mm** Weight: **316 g**

DIN rail length in mm	max. fitting length in mm	Earthing rail clamp	Mounting plate (thickness in mm)	External mounting brackets	External hinge* set	EMC version	Internal hinge* set	SWB / SBG / SBGL Corr.protection	Allen lid screws	Silicone lid seal	Sealable lid screws in steel	Turn bolt fastener
TS 15												
139						•		•	•	•	•	

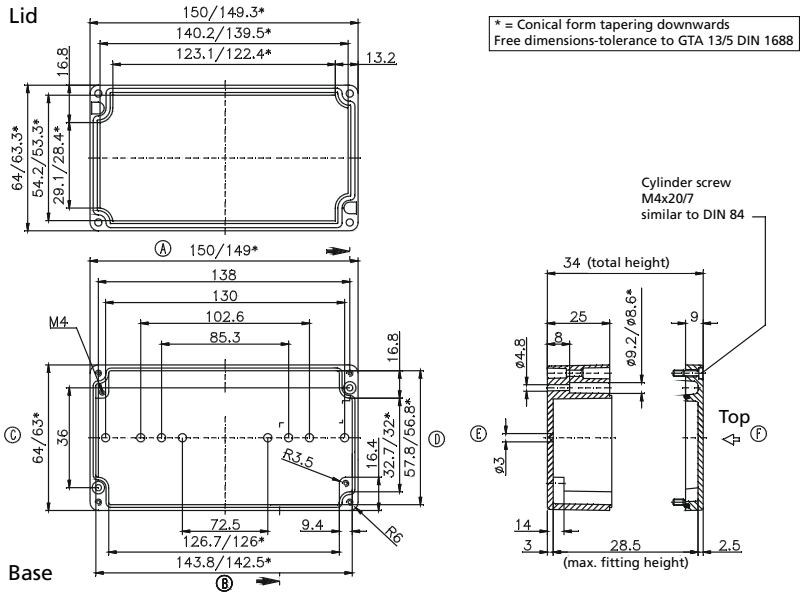

Maximum number of cable glands to **DIN 50262***

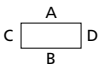

M	Corner dim.	Side A/B	Side C/D	PG	Corner dim.	Side A/B	Side C/D
12	17,25	8	1	7	17,25	8	1
16	25,30			9	21,85	6	1
20	27,60			11	25,30		
25	37,95			13,5	27,60		
32	48,30			16	31,05		
40	60,95			21	37,95		
50	69,00			29	48,30		
63	74,75			36	60,95		
				42	69,00		
				48	74,75		

Type: **01.06 19 00** External dimensions: **64 x 185 x 34 mm** Weight: **420 g**

DIN rail length in mm	max. fitting length in mm	Earthing rail clamp	Mounting plate (thickness in mm)	External mounting brackets	External hinge* set	EMC version	Internal hinge* set	SWB / SBG / SBGL Corr.protection	Allen lid screws	Silicone lid seal	Sealable lid screws in steel	Turn bolt fastener
TS 15												
174						•		•	•	•	•	

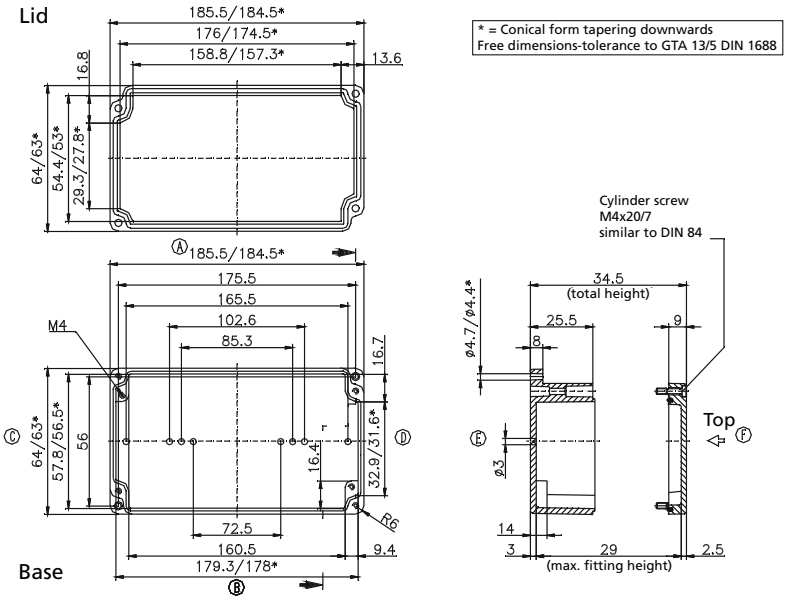

Maximum number of cable glands to **DIN 50262***

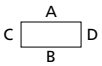

M	Corner dim.	Side A/B	Side C/D	PG	Corner dim.	Side A/B	Side C/D
12	17,25	10	1	7	17,25	10	1
16	25,30			9	21,85	7	1
20	27,60			11	25,30		
25	37,95			13,5	27,60		
32	48,30			16	31,05		
40	60,95			21	37,95		
50	69,00			29	48,30		
63	74,75			36	60,95		
				42	69,00		
				48	74,75		

Type: **01.06 19 03** External dimensions: **64 x 185 x 34 mm** Weight: **500 g**

DIN rail length in mm	max. fitting length in mm	Earthing rail clamp	Mounting plate (thickness in mm)	External mounting brackets	External hinge* set	EMC version	Internal hinge* set	SWB / SBG / SBGL Corr.protection	Allen lid screws	Silicone lid seal	Sealable lid screws in steel	Turn bolt fastener
TS 15												
174						•		•	•	•	•	

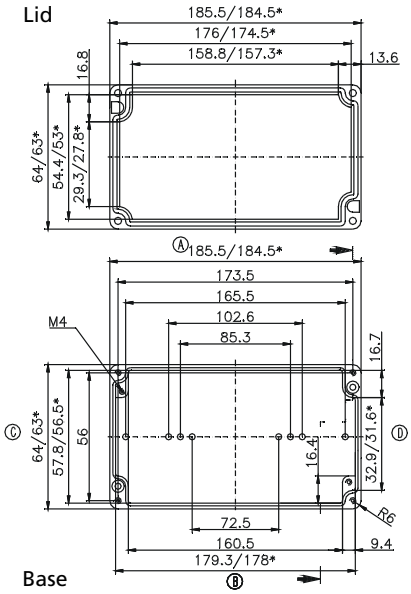

* = Conical form tapering downwards
Free dimensions-tolerance to GTA 13/5 DIN 1688

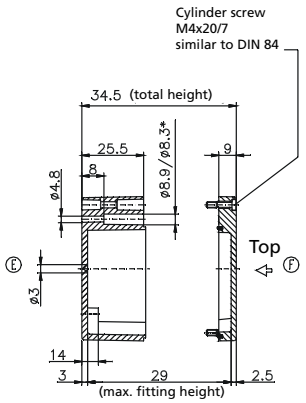

Maximum number of cable glands to **DIN 50262***

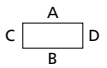

M	Corner dim.	Side A/B	Side C/D	PG	Corner dim.	Side A/B	Side C/D
12	17,25	10		7	17,25	10	
16	25,30			9	21,85		
20	27,60			11	25,30		
25	37,95			13,5	27,60		
32	48,30			16	31,05		
40	60,95			21	37,95		
50	69,00			29	48,30		
63	74,75			36	60,95		
				42	69,00		
				48	74,75		

Type: **01.08 08 06** External dimensions: **80 x 75 x 57 mm** Weight: **360 g**

DIN rail length in mm	max. fitting length in mm	Earthing rail clamp	Mounting plate (thickness in mm)	External mounting brackets	External hinge* set	EMC version	Internal hinge* set	SWB / SBG / SBGL Corr.protection	Allen lid screws	Silicone lid seal	Sealable lid screws in steel	Turn bolt fastener
TS 15												
63	46		1,5	•		•		•	•	•	•	

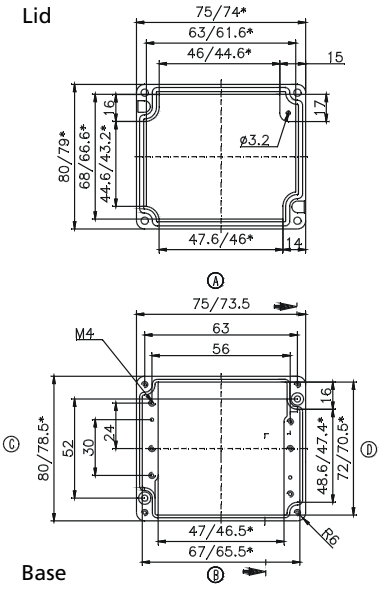

* = Conical form tapering downwards
Free dimensions-tolerance to GTA 13/5 DIN 1688

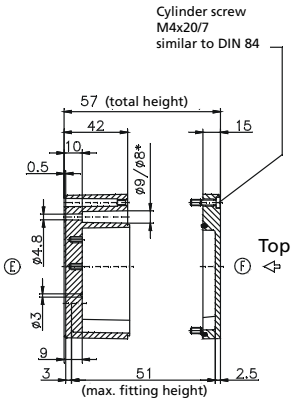

Maximum number of cable glands to **DIN 50262***

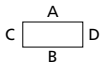

M	Corner dim.	Side A/B	Side C/D	PG	Corner dim.	Side A/B	Side C/D
12	17,25	6	5	7	17,25	6	5
16	25,30	2	2	9	21,85	4	2
20	27,60	2	2	11	25,30	2	2
25	37,95	1		13,5	27,60	2	2
32	48,30			16	31,05	1	1
40	60,95			21	37,95	1	
50	69,00			29	48,30		
63	74,75			36	60,95		
				42	69,00		
				48	74,75		

* Please quote mounting side

Type: **01.08 13 06** External dimensions: **80 x 125 x 57 mm** Weight: **500 g**

DIN rail length in mm	max. fitting length in mm	Earthing rail clamp	Mounting plate (thickness in mm)	External mounting brackets	External hinge* set	EMC version	Internal hinge* set	SWB / SBG / SBGL Corr.protection	Allen lid screws	Silicone lid seal	Sealable lid screws in steel	Turn bolt fastener
TS 15												
113	96		1,5	•		•		•	•	•	•	

Maximum number of cable glands to **DIN 50262***

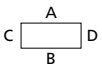

M	Corner dim.	Side A/B	Side C/D	PG	Corner dim.	Side A/B	Side C/D
12	17,25	12	5	7	17,25	12	5
16	25,30	5	2	9	21,85	8	2
20	27,60	4	2	11	25,30	5	2
25	37,95	3		13,5	27,60	4	2
32	48,30			16	31,05	3	1
40	60,95			21	37,95	2	
50	69,00			29	48,30		
63	74,75			36	60,95		
				42	69,00		
				48	74,75		

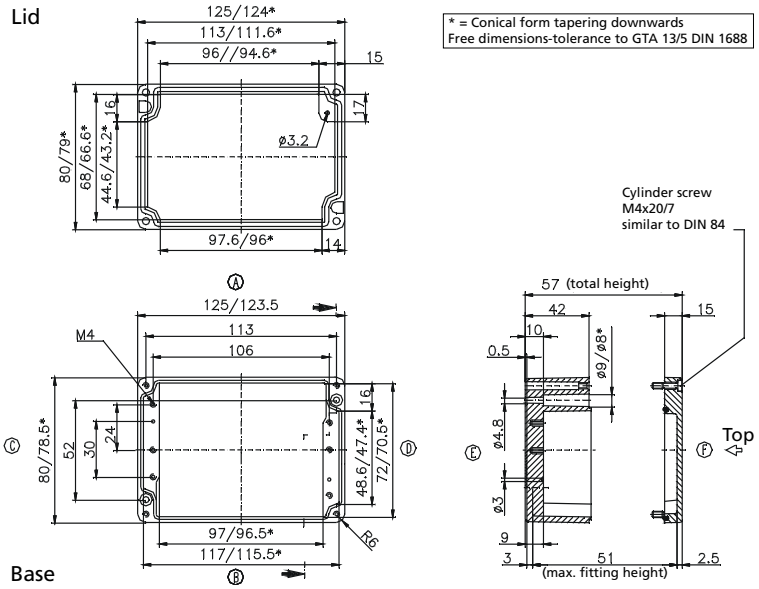

Type: **01.08 18 06** External dimensions: **80 x 175 x 57 mm** Weight: **630 g**

DIN rail length in mm	max. fitting length in mm	Earthing rail clamp	Mounting plate (thickness in mm)	External mounting brackets	External hinge* set	EMC version	Internal hinge* set	SWB / SBG / SBGL Corr.protection	Allen lid screws	Silicone lid seal	Sealable lid screws in steel	Turn bolt fastener
TS 15												
163	146		1,5	•		•		•	•	•	•	

Maximum number of cable glands to **DIN 50262***

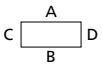

M	Corner dim.	Side A/B	Side C/D	PG	Corner dim.	Side A/B	Side C/D
12	17,25	17	5	7	17,25	17	5
16	25,30	7	2	9	21,85	11	2
20	27,60	6	2	11	25,30	7	2
25	37,95	4		13,5	27,60	6	2
32	48,30			16	31,05	5	1
40	60,95			21	37,95	4	
50	69,00			29	48,30		
63	74,75			36	60,95		
				42	69,00		
				48	74,75		

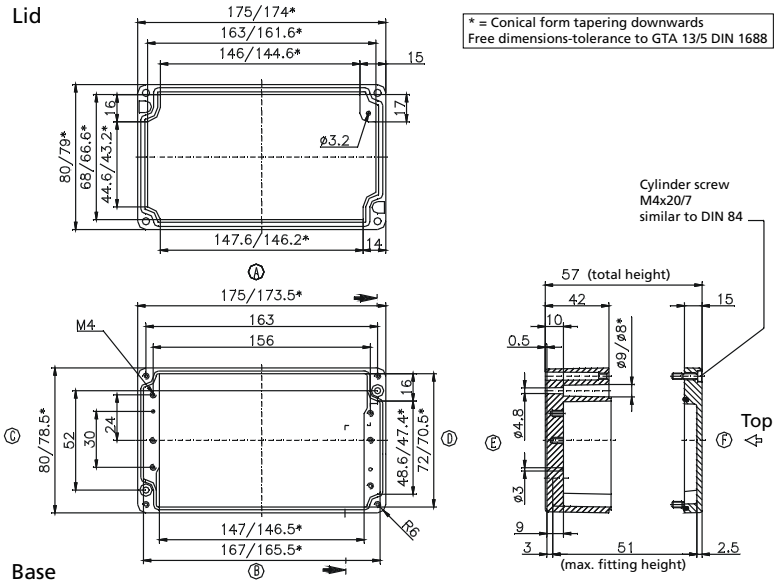

* Please quote mounting side

Type: **01.08 25 05** External dimensions: **80 x 250 x 52 mm** Weight: **818 g**

DIN rail length in mm	max. fitting length in mm	Earthing rail clamp	Mounting plate (thickness in mm)	External mounting brackets	External hinge* set	EMC version	Internal hinge* set	SWB / SBG / SBGL Corr.protection	Allen lid screws	Silicone lid seal	Sealable lid screws in steel	Turn bolt fastener
TS 15												
238	220			•		•		•	•	•	•	

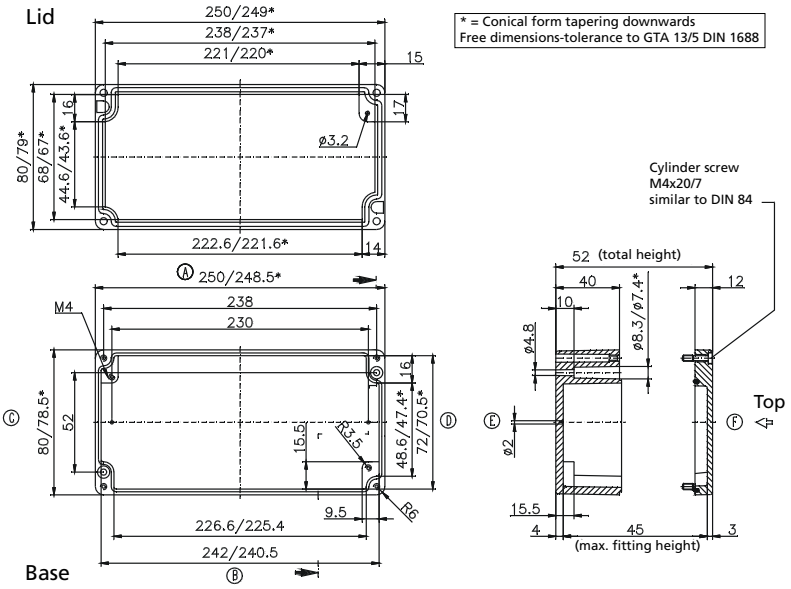

Maximum number of cable glands to **DIN 50262***

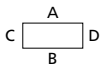

M	Corner dim.	Side A/B	Side C/D	PG	Corner dim.	Side A/B	Side C/D
12	17,25	26	6	7	17,25	26	6
16	25,30	10	2	9	21,85	17	3
20	27,60	9	2	11	25,30	10	2
25	37,95	6	1	13,5	27,60	9	2
32	48,30			16	31,05	7	1
40	60,95			21	37,95	4	1
50	69,00			29	48,30		
63	74,75			36	60,95		
				42	69,00		
				48	74,75		

Type: **01.10 10 08** External dimensions: **100 x 100 x 81 mm** Weight: **800 g**

DIN rail length in mm	max. fitting length in mm	Earthing rail clamp	Mounting plate (thickness in mm)	External mounting brackets	External hinge* set	EMC version	Internal hinge* set	SWB / SBG / SBGL Corr.protection	Allen lid screws	Silicone lid seal	Sealable lid screws in steel	Turn bolt fastener
TS 15												
87,5	70		1,5	•	•	•		•	•	•	•	

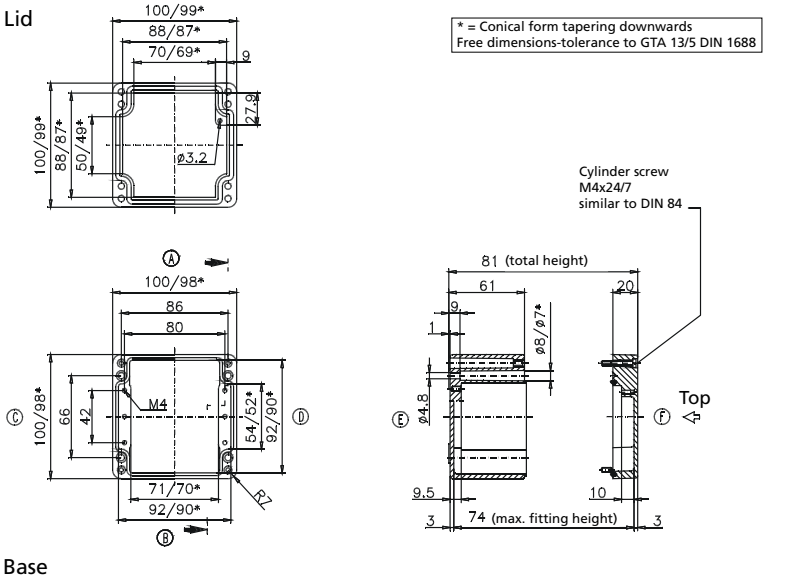

Maximum number of cable glands to **DIN 50262***

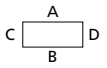

M	Corner dim.	Side A/B	Side C/D	PG	Corner dim.	Side A/B	Side C/D
12	17,25	12	9	7	17,25	12	9
16	25,30	6	4	9	21,85	8	5
20	27,60	5	3	11	25,30	5	4
25	37,95	2	1	13,5	27,60	5	3
32	48,30	1	1	16	31,05	4	2
40	60,95			21	37,95	2	1
50	69,00			29	48,30	1	1
63	74,75			36	60,95		
				42	69,00		
				48	74,75		

* Please quote mounting side

Type: **01.10 16 08** External dimensions: **100 x 160 x 81 mm** Weight: **870 g**

DIN rail length in mm	max. fitting length in mm	Earthing rail clamp	Mounting plate (thickness in mm)	External mounting brackets	External hinge* set	EMC version	Internal hinge* set	SWB / SBG / SBGL Corr.protection	Allen lid screws	Silicone lid seal	Sealable lid screws in steel	Turn bolt fastener
TS 15												
148	130		1,5	•	•	•		•	•	•	•	

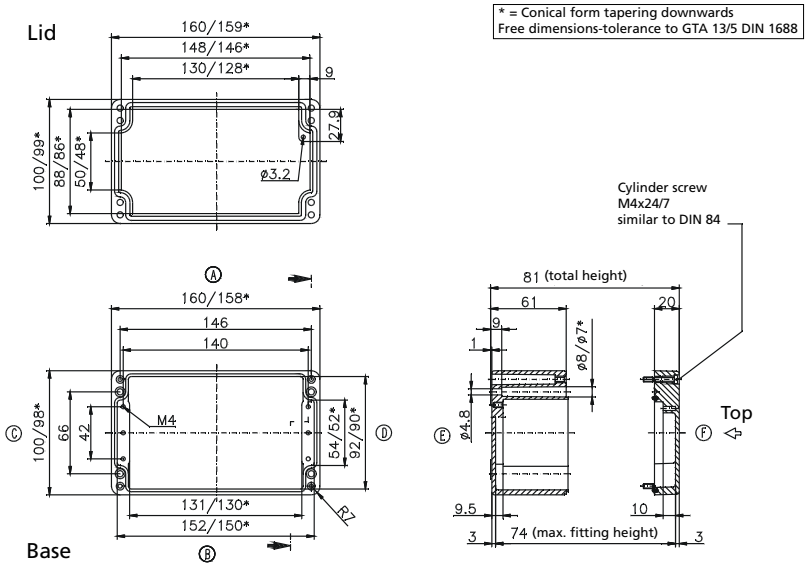

Maximum number of cable glands to **DIN 50262***

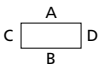

M	Corner dim.	Side A/B	Side C/D	PG	Corner dim.	Side A/B	Side C/D
12	17,25	24	9	7	17,25	22	8
16	25,30	11	4	9	21,85	17	5
20	27,60	10	3	11	25,30	11	4
25	37,95	4	1	13,5	27,60	10	3
32	48,30	3	1	16	31,05	8	2
40	60,95			21	37,95	4	1
50	69,00			29	48,30	3	1
63	74,75			36	60,95		
				42	69,00		
				48	74,75		

Type: **01.10 20 08** External dimensions: **100 x 200 x 81 mm** Weight: **960 g**

DIN rail length in mm	max. fitting length in mm	Earthing rail clamp	Mounting plate (thickness in mm)	External mounting brackets	External hinge* set	EMC version	Internal hinge* set	SWB / SBG / SBGL Corr.protection	Allen lid screws	Silicone lid seal	Sealable lid screws in steel	Turn bolt fastener
TS 15												
188	170		1,5	•	•	•		•	•	•	•	

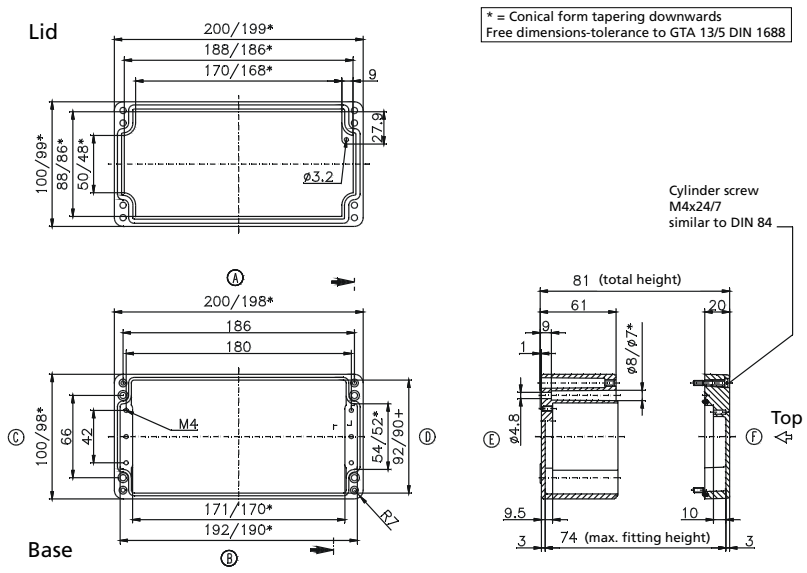

Maximum number of cable glands to **DIN 50262***

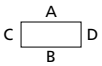

M	Corner dim.	Side A/B	Side C/D	PG	Corner dim.	Side A/B	Side C/D
12	17,25	32	9	7	17,25	30	9
16	25,30	14	4	9	21,85	21	5
20	27,60	12	3	11	25,30	12	4
25	37,95	5	1	13,5	27,60	12	3
32	48,30	3	1	16	31,05	10	2
40	60,95			21	37,95	5	1
50	69,00			29	48,30	3	1
63	74,75			36	60,95		
				42	69,00		
				48	74,75		

* Please quote mounting side

Type: **01.12 12 08** External dimensions: **120 x 122 x 81 mm** Weight: **1044 g**

DIN rail length in mm	max. fitting length in mm	Earthing rail clamp	Mounting plate (thickness in mm)	External mounting brackets	External hinge* set	EMC version	Internal hinge* set	SWB / SBG / SBGL Corr.protection	Allen lid screws	Silicone lid seal	Sealable lid screws in steel	Turn bolt fastener
TS 35												
107	85	6	1,5	•	•	•		•	•	•	•	

Maximum number of cable glands to **DIN 50262***

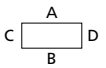

M	Corner dim.	Side A/B	Side C/D	PG	Corner dim.	Side A/B	Side C/D
12	17,25	16	11	7	17,25	16	11
16	25,30	8	5	9	21,85	11	6
20	27,60	6	4	11	25,30	6	4
25	37,95	3	2	13,5	27,60	6	3
32	48,30	2	1	16	31,05	5	2
40	60,95			21	37,95	2	2
50	69,00			29	48,30	2	1
63	74,75			36	60,95		
				42	69,00		
				48	74,75		

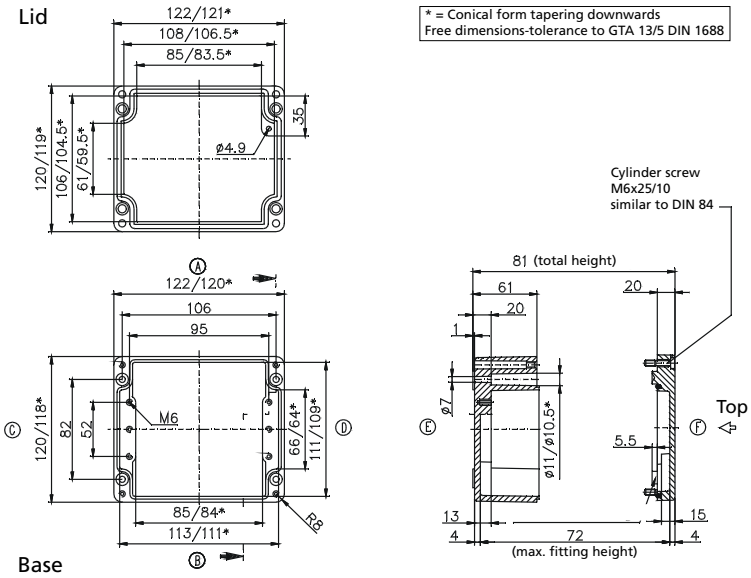

Type: **01.12 12 09** External dimensions: **120 x 122 x 91 mm** Weight: **1170 g**

DIN rail length in mm	max. fitting length in mm	Earthing rail clamp	Mounting plate (thickness in mm)	External mounting brackets	External hinge* set	EMC version	Internal hinge* set	SWB / SBG / SBGL Corr.protection	Allen lid screws	Silicone lid seal	Sealable lid screws in steel	Turn bolt fastener
TS 35												
107	85	6	1,5	•	•	•		•	•	•	•	

Maximum number of cable glands to **DIN 50262***

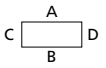

M	Corner dim.	Side A/B	Side C/D	PG	Corner dim.	Side A/B	Side C/D
12	17,25	16	11	7	17,25	16	11
16	25,30	8	5	9	21,85	11	6
20	27,60	6	4	11	25,30	6	4
25	37,95	3	2	13,5	27,60	6	3
32	48,30	2	1	16	31,05	5	2
40	60,95			21	37,95	2	2
50	69,00			29	48,30	2	1
63	74,75			36	60,95		
				42	69,00		
				48	74,75		

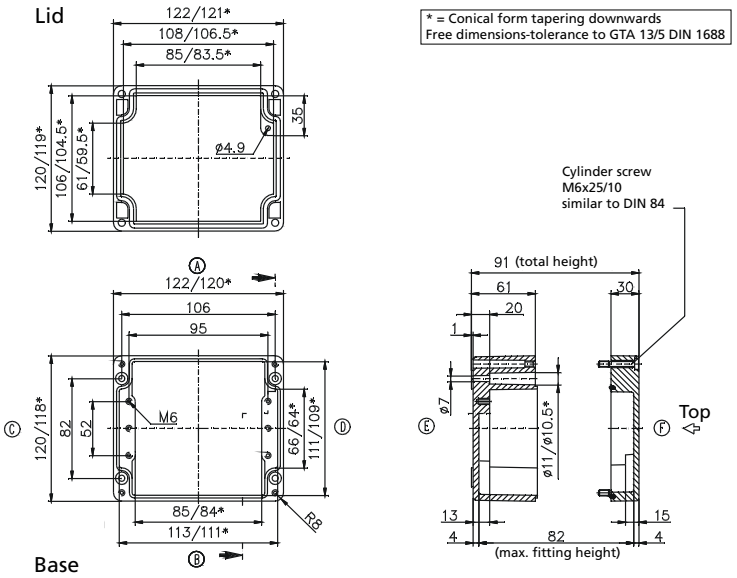

* Please quote mounting side

Type: **01.12 22 08** External dimensions: **120 x 220 x 81 mm** Weight: **1445 g**

DIN rail length in mm	max. fitting length in mm	Earthing rail clamp	Mounting plate (thickness in mm)	External mounting brackets	External hinge* set	EMC version	Internal hinge* set	SWB / SBG / SBGL Corr.protection	Allen lid screws	Silicone lid seal	Sealable lid screws in steel	Turn bolt fastener
TS 35												
205	183	13	1,5	•	•	•		•	•	•	•	

Maximum number of cable glands to **DIN 50262***

A
C D
B

M	Corner dim.	Side A/B	Side C/D	PG	Corner dim.	Side A/B	Side C/D
12	17,25	34	11	7	17,25	34	11
16	25,30	15	6	9	21,85	24	6
20	27,60	14	4	11	25,30	15	4
25	37,95	6	2	13,5	27,60	14	4
32	48,30	4	1	16	31,05	11	2
40	60,95			21	37,95	6	2
50	69,00			29	48,30	4	1
63	74,75			36	60,95		
				42	69,00		
				48	74,75		

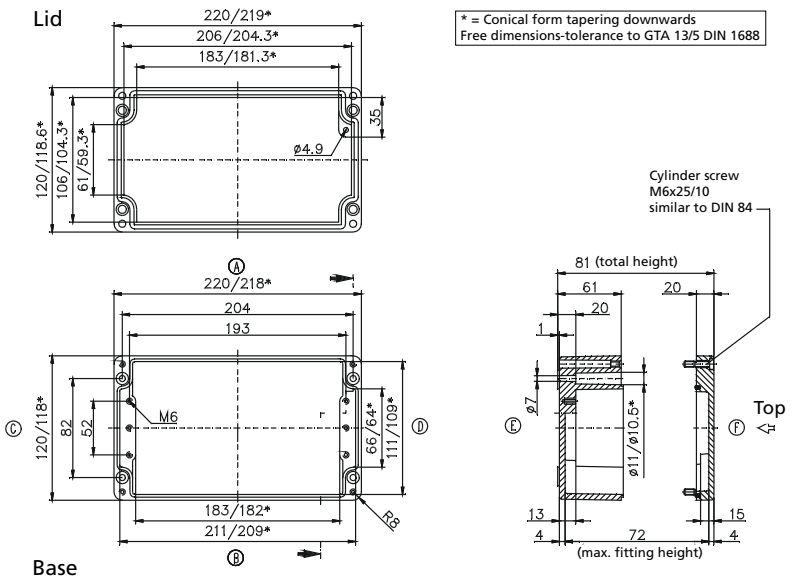

Type: **01.12 22 09** External dimensions: **120 x 220 x 91 mm** Weight: **1800 g**

DIN rail length in mm	max. fitting length in mm	Earthing rail clamp	Mounting plate (thickness in mm)	External mounting brackets	External hinge* set	EMC version	Internal hinge* set	SWB / SBG / SBGL Corr.protection	Allen lid screws	Silicone lid seal	Sealable lid screws in steel	Turn bolt fastener
TS 35												
205	183	13	1,5	•	•	•		•	•	•	•	

Maximum number of cable glands to **DIN 50262***

A
C D
B

M	Corner dim.	Side A/B	Side C/D	PG	Corner dim.	Side A/B	Side C/D
12	17,25	34	11	7	17,25	34	11
16	25,30	15	6	9	21,85	24	6
20	27,60	14	4	11	25,30	15	4
25	37,95	6	2	13,5	27,60	14	4
32	48,30	4	1	16	31,05	11	2
40	60,95			21	37,95	6	2
50	69,00			29	48,30	4	1
63	74,75			36	60,95		
				42	69,00		
				48	74,75		

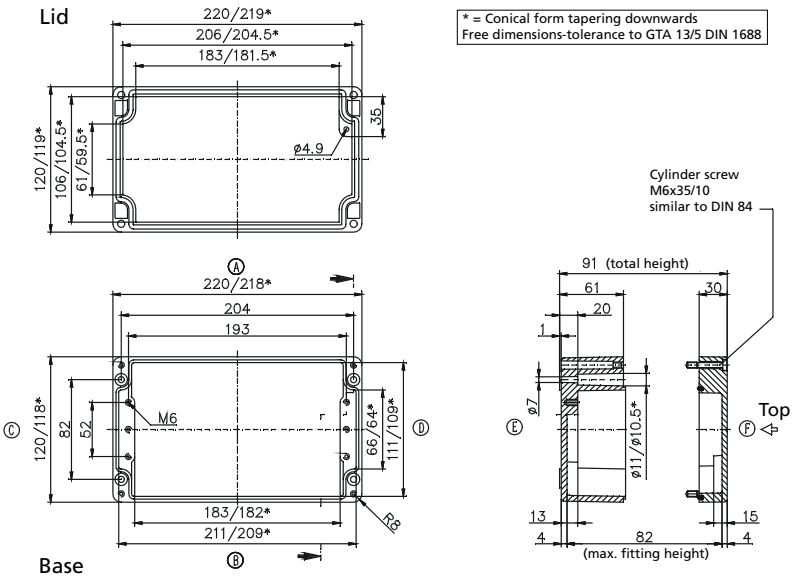

* Please quote mounting side

Type: **01.12 22 12** External dimensions: **120 x 220 x 118 mm** Weight: **1410 g**

DIN rail length in mm	max. fitting length in mm	Earthing rail clamp	Mounting plate (thickness in mm)	External mounting brackets	External hinge* set	EMC version	Internal hinge* set	SWB / SBG / SBGL Corr.protection	Allen lid screws	Silicone lid seal	Sealable lid screws in steel	Turn bolt fastener
TS 35												
208	183	13	1,5	•	•	•		•	•	•	•	

Maximum number of cable glands to **DIN 50262***

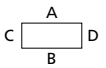

M	Corner dim.	Side A/B	Side C/D	PG	Corner dim.	Side A/B	Side C/D
12	17,25	34	11	7	17,25	34	11
16	25,30	15	6	9	21,85	24	6
20	27,60	14	4	11	25,30	15	4
25	37,95	6	2	13,5	27,60	14	4
32	48,30	4	1	16	31,05	11	2
40	60,95			21	37,95	6	2
50	69,00			29	48,30	4	1
63	74,75			36	60,95		
				42	69,00		
				48	74,75		

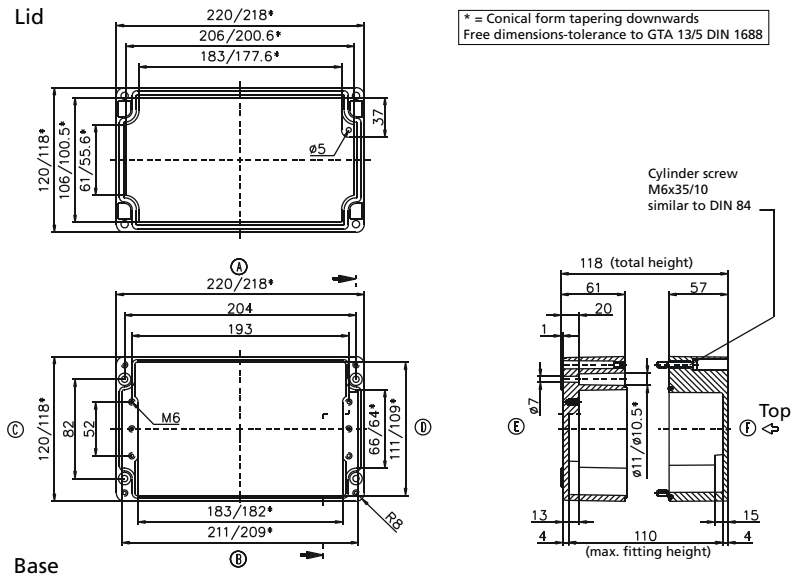

Type: **01.12 36 08** External dimensions: **120 x 360 x 81 mm** Weight: **2100 g**

DIN rail length in mm	max. fitting length in mm	Earthing rail clamp	Mounting plate (thickness in mm)	External mounting brackets	External hinge* set	EMC version	Internal hinge* set	SWB / SBG / SBGL Corr.protection	Allen lid screws	Silicone lid seal	Sealable lid screws in steel	Turn bolt fastener
TS 35												
343	323	23	1,5	•	•	•		•	•	•	•	•

Maximum number of cable glands to **DIN 50262***

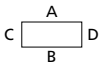

M	Corner dim.	Side A/B	Side C/D	PG	Corner dim.	Side A/B	Side C/D
12	17,25	58	11	7	17,25	58	11
16	25,30	26	5	9	21,85	41	6
20	27,60	24	4	11	25,30	26	4
25	37,95	10	2	13,5	27,60	24	3
32	48,30	7	1	16	31,05	20	2
40	60,95			21	37,95	10	2
50	69,00			29	48,30	7	1
63	74,75			36	60,95		
				42	69,00		
				48	74,75		

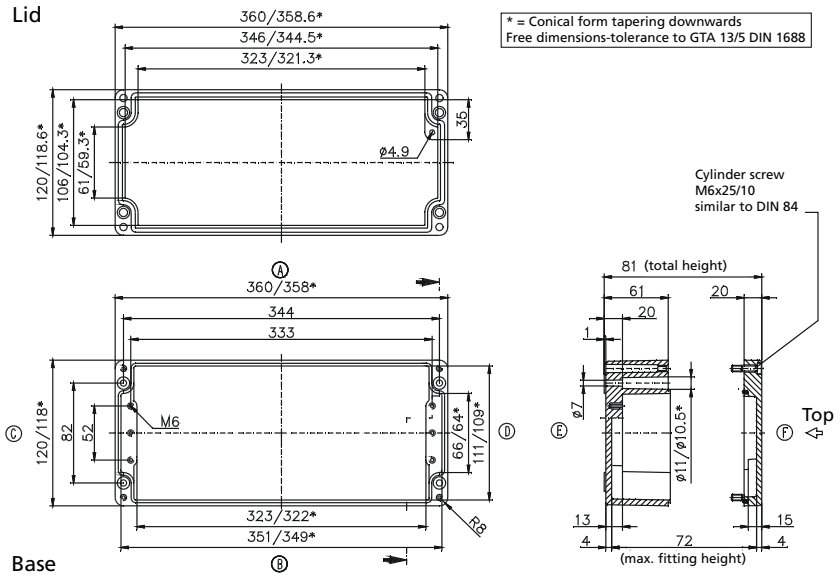

* Please quote mounting side

Type: **01.14 14 09** External dimensions: **140 x 140 x 91 mm** Weight: **1470 g**

DIN rail length in mm	max. fitting length in mm	Earthing rail clamp	Mounting plate (thickness in mm)	External mounting brackets	External hinge* set	EMC version	Internal hinge* set	SWB / SBG / SBGL Corr.protection	Allen lid screws	Silicone lid seal	Sealable lid screws in steel	Turn bolt fastener
TS 35												
126	100	6	1,5	•	•	•		•	•	•	•	

Maximum number of cable glands to **DIN 50262***

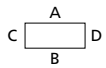

M	Corner dim.	Side A/B	Side C/D	PG	Corner dim.	Side A/B	Side C/D
12	17,25	18	12	7	17,25	18	12
16	25,30	8	6	9	21,85	12	6
20	27,60	8	4	11	25,30	8	5
25	37,95	3	2	13,5	27,60	8	4
32	48,30	2	1	16	31,05	6	3
40	60,95			21	37,95	3	2
50	69,00			29	48,30	2	1
63	74,75			36	60,95		
				42	69,00		
				48	74,75		

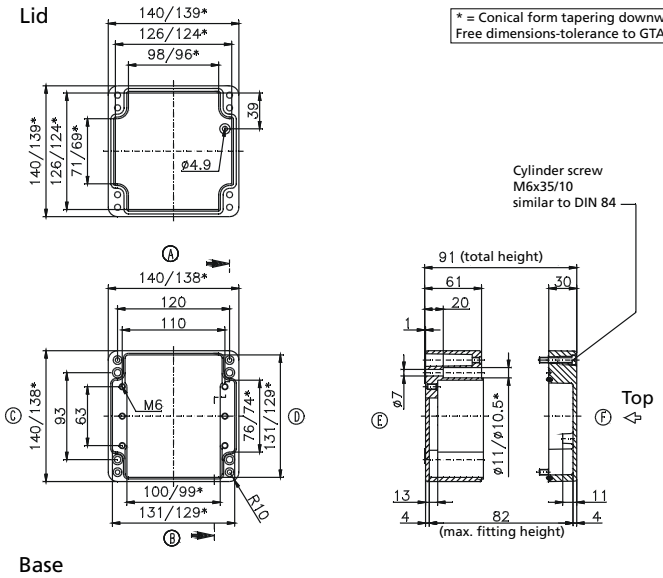

Type: **01.14 20 09** External dimensions: **140 x 200 x 91 mm** Weight: **1760 g**

DIN rail length in mm	max. fitting length in mm	Earthing rail clamp	Mounting plate (thickness in mm)	External mounting brackets	External hinge* set	EMC version	Internal hinge* set	SWB / SBG / SBGL Corr.protection	Allen lid screws	Silicone lid seal	Sealable lid screws in steel	Turn bolt fastener
TS 35												
186	160	11	1,5	•	•	•		•	•	•	•	•

Maximum number of cable glands to **DIN 50262***

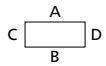

M	Corner dim.	Side A/B	Side C/D	PG	Corner dim.	Side A/B	Side C/D
12	17,25	28	12	7	17,25	28	12
16	25,30	12	6	9	21,85	20	6
20	27,60	12	5	11	25,30	12	6
25	37,95	5	2	13,5	27,60	12	4
32	48,30	3	1	16	31,05	10	3
40	60,95			21	37,95	5	2
50	69,00			29	48,30	3	1
63	74,75			36	60,95		
				42	69,00		
				48	74,75		

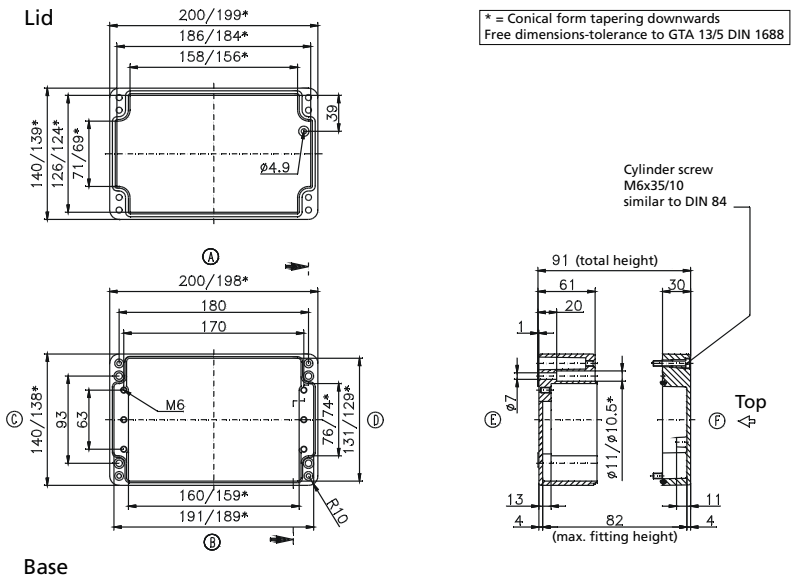

* Please quote mounting side

Type: **01.16 16 09** External dimensions: **160 x 160 x 91 mm** Weight: **1760 g**

DIN rail length in mm	max. fitting length in mm	Earthing rail clamp	Mounting plate (thickness in mm)	External mounting brackets	External hinge* set	EMC version	Internal hinge* set	SWB / SBG / SBGL Corr.protection	Allen lid screws	Silicone lid seal	Sealable lid screws in steel	Turn bolt fastener
TS 35												
144	120	8	1,5	•	•	•	•	•	•	•	•	•

Maximum number of cable glands to **DIN 50262***

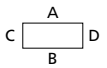

M	Corner dim.	Side A/B	Side C/D	PG	Corner dim.	Side A/B	Side C/D
12	17,25	26	16	7	17,25	26	16
16	25,30	12	8	9	21,85	15	11
20	27,60	9	6	11	25,30	12	6
25	37,95	5	3	13,5	27,60	9	6
32	48,30	3	2	16	31,05	8	5
40	60,95	2	1	21	37,95	5	3
50	69,00	2		29	48,30	2	2
63	74,75			36	60,95	2	1
				42	69,00	1	
				48	74,75		

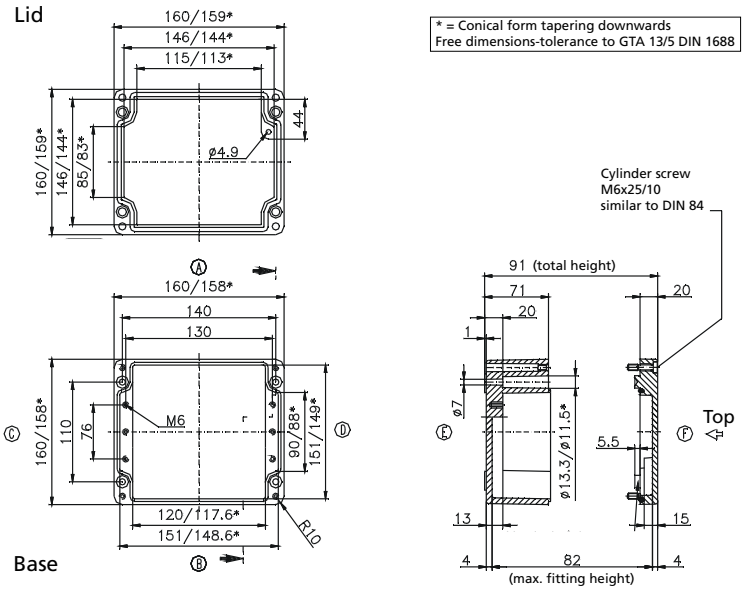

Type: **01.16 26 09** External dimensions: **160 x 260 x 91 mm** Weight: **2300 g**

DIN rail length in mm	max. fitting length in mm	Earthing rail clamp	Mounting plate (thickness in mm)	External mounting brackets	External hinge* set	EMC version	Internal hinge* set	SWB / SBG / SBGL Corr.protection	Allen lid screws	Silicone lid seal	Sealable lid screws in steel	Turn bolt fastener
TS 35												
245	220	16	1,5	•	•	•	•	•	•	•	•	•

Maximum number of cable glands to **DIN 50262***

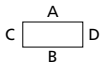

M	Corner dim.	Side A/B	Side C/D	PG	Corner dim.	Side A/B	Side C/D
12	17,25	50	16	7	17,25	50	16
16	25,30	24	8	9	21,85	30	11
20	27,60	17	6	11	25,30	23	6
25	37,95	10	3	13,5	27,60	17	6
32	48,30	5	2	16	31,05	14	5
40	60,95	3	1	21	37,95	9	3
50	69,00	3		29	48,30	5	2
63	74,75			36	60,95	3	1
				42	69,00	3	
				48	74,75		

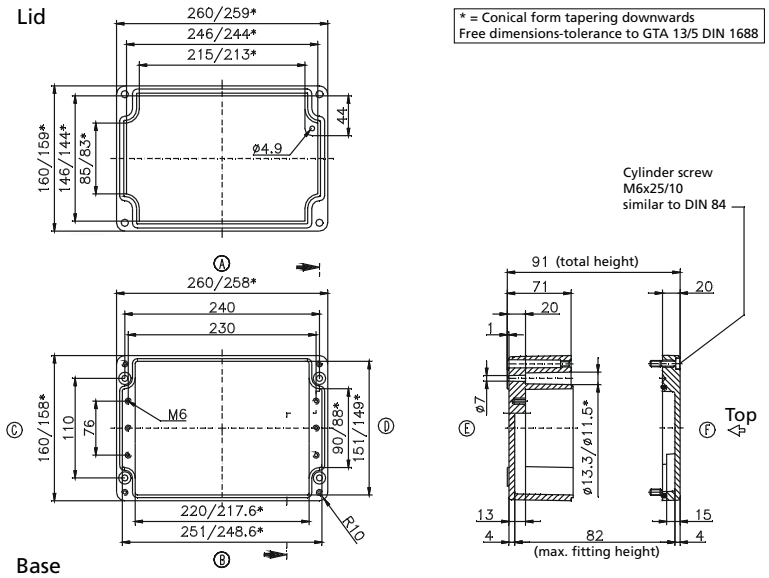

* Please quote mounting side

Type: **01.16 36 09** External dimensions: **160 x 360 x 91 mm** Weight: **2940 g**

DIN rail length in mm	max. fitting length in mm	Earthing rail clamp	Mounting plate (thickness in mm)	External mounting brackets	External hinge* set	EMC version	Internal hinge* set	SWB / SBG / SBGL Corr.protection	Allen lid screws	Silicone lid seal	Sealable lid screws in steel	Turn bolt fastener
TS 35												
343	320	23	1,5	•	•	•	•	•	•	•	•	•

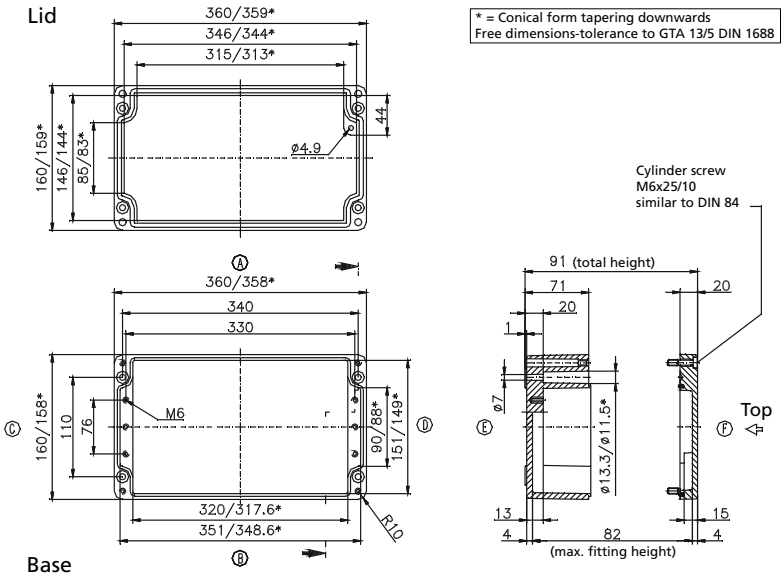

Maximum number of cable glands to **DIN 50262***

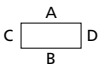

M	Corner dim.	Side A/B	Side C/D	PG	Corner dim.	Side A/B	Side C/D
12	17,25	72	16	7	17,25	72	16
16	25,30	36	8	9	21,85	42	11
20	27,60	24	6	11	25,30	33	6
25	37,95	15	3	13,5	27,60	24	6
32	48,30	7	2	16	31,05	20	5
40	60,95	5	1	21	37,95	14	3
50	69,00	4		29	48,30	7	2
63	74,75			36	60,95	5	1
				42	69,00	4	
				48	74,75		

Type: **01.16 56 09** External dimensions: **160 x 560 x 91 mm** Weight: **4457 g**

DIN rail length in mm	max. fitting length in mm	Earthing rail clamp	Mounting plate (thickness in mm)	External mounting brackets	External hinge* set	EMC version	Internal hinge* set	SWB / SBG / SBGL Corr.protection	Allen lid screws	Silicone lid seal	Sealable lid screws in steel	Turn bolt fastener
TS 35												
543	520	36	2	•	•	•	•	•	•	•	•	•

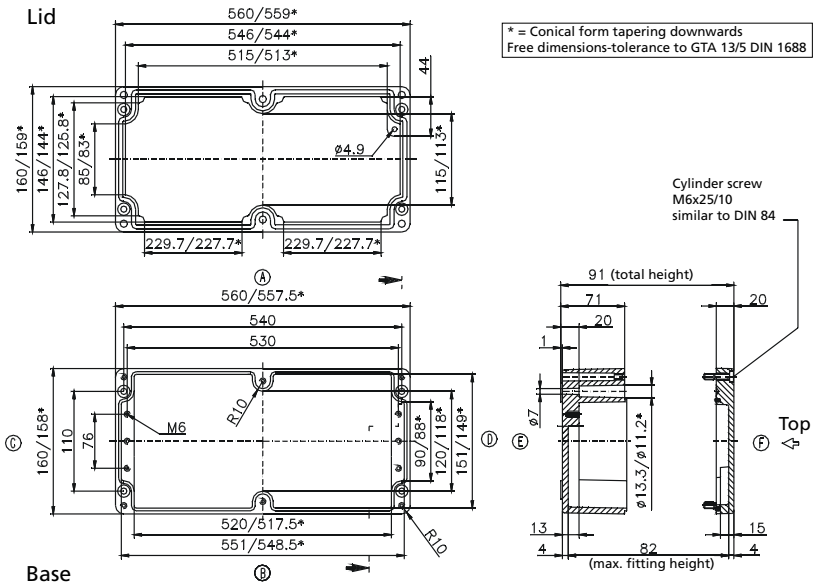

Maximum number of cable glands to **DIN 50262***

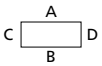

M	Corner dim.	Side A/B	Side C/D	PG	Corner dim.	Side A/B	Side C/D
12	17,25	104	16	7	17,25	104	16
16	25,30	58	8	9	21,85	66	11
20	27,60	40	6	11	25,30	58	6
25	37,95	24	3	13,5	27,60	40	6
32	48,30	12	2	16	31,05	32	5
40	60,95	8	1	21	37,95	24	3
50	69,00	6		29	48,30	12	2
63	74,75			36	60,95	8	1
				42	69,00	6	
				48	74,75		

* Please quote mounting side

Type: **01.18 18 10** External dimensions: **180 x 180 x 101 mm** Weight: **2400 g**

DIN rail length in mm	max. fitting length in mm	Earthing rail clamp	Mounting plate (thickness in mm)	External mounting brackets	External hinge* set	EMC version	Internal hinge* set	SWB / SBG / SBGL Corr.protection	Allen lid screws	Silicone lid seal	Sealable lid screws in steel	Turn bolt fastener
TS 35												
166	140	8	1,5	•	•	•	•	•	•	•	•	•

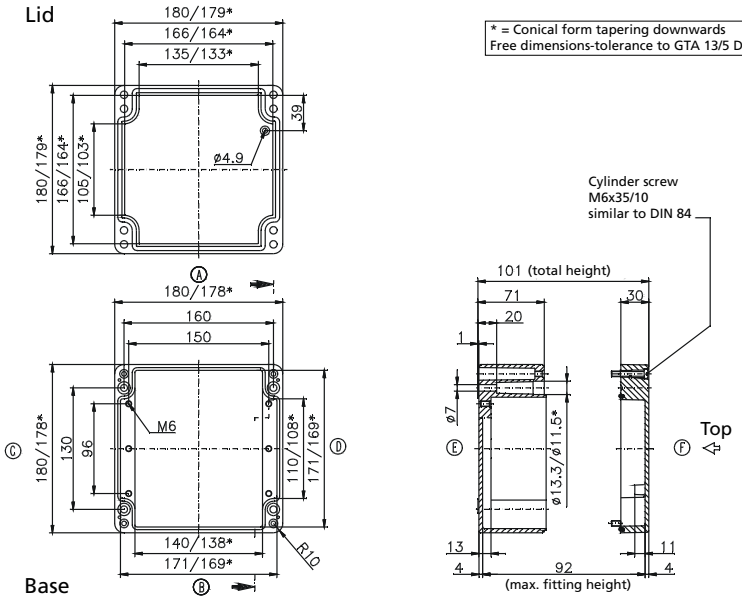

Maximum number of cable glands to **DIN 50262***

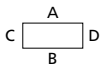

M	Corner dim.	Side A/B	Side C/D	PG	Corner dim.	Side A/B	Side C/D
12	17,25	30	20	7	17,25	28	20
16	25,30	15	9	9	21,85	18	14
20	27,60	11	8	11	25,30	15	8
25	37,95	6	3	13,5	27,60	11	8
32	48,30	3	2	16	31,05	8	6
40	60,95	2	2	21	37,95	6	3
50	69,00	2		29	48,30	3	2
63	74,75			36	60,95	2	2
				42	69,00	2	
				48	74,75		

Type: **01.18 28 10** External dimensions: **180 x 280 x 101 mm** Weight: **3000 g**

DIN rail length in mm	max. fitting length in mm	Earthing rail clamp	Mounting plate (thickness in mm)	External mounting brackets	External hinge* set	EMC version	Internal hinge* set	SWB / SBG / SBGL Corr.protection	Allen lid screws	Silicone lid seal	Sealable lid screws in steel	Turn bolt fastener
TS 35												
264	240	17	1,5	•	•	•	•	•	•	•	•	•

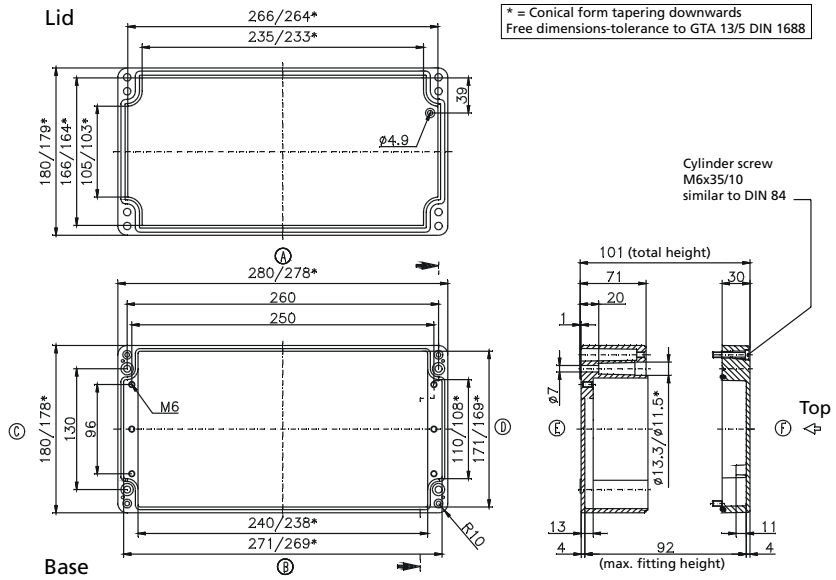

Maximum number of cable glands to **DIN 50262***

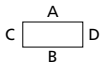

M	Corner dim.	Side A/B	Side C/D	PG	Corner dim.	Side A/B	Side C/D
12	17,25	52	22	7	17,25	52	22
16	25,30	26	10	9	21,85	33	15
20	27,60	18	8	11	25,30	23	10
25	37,95	11	4	13,5	27,60	18	8
32	48,30	5	2	16	31,05	14	7
40	60,95	4	2	21	37,95	10	4
50	69,00	3		29	48,30	5	2
63	74,75			36	60,95	4	2
				42	69,00	3	
				48	74,75		

* Please quote mounting side

Type: **01.23 10 11** External dimensions: **230 x 100 x 111 mm** Weight: **2300 g**

DIN rail length in mm	max. fitting length in mm	Earthing rail clamp	Mounting plate (thickness in mm)	External mounting brackets	External hinge* set	EMC version	Internal hinge* set	SWB / SBG / SBGL Corr.protection	Allen lid screws	Silicone lid seal	Sealable lid screws in steel	Turn bolt fastener
TS 35												
214	190	13	1,5	•	•	•	•	•	•	•	•	•

Maximum number of cable glands to **DIN 50262***

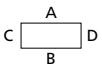

M	Corner dim.	Side A/B	Side C/D	PG	Corner dim.	Side A/B	Side C/D
12	17,25	15	45	7	17,25	15	45
16	25,30	8	18	9	21,85	10	28
20	27,60	6	17	11	25,30	6	18
25	37,95	3	8	13,5	27,60	6	17
32	48,30	2	5	16	31,05	5	12
40	60,95	1	3	21	37,95	3	8
50	69,00	1	2	29	48,30	1	4
63	74,75		2	36	60,95	1	3
				42	69,00	1	2
				48	74,75	1	2

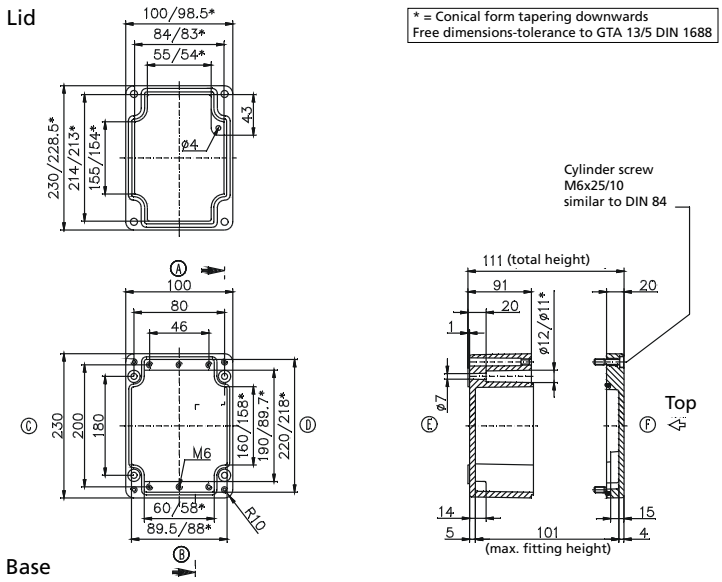

Type: **01.23 20 11** External dimensions: **232 x 202 x 111 mm** Weight: **2880 g**

DIN rail length in mm	max. fitting length in mm	Earthing rail clamp	Mounting plate (thickness in mm)	External mounting brackets	External hinge* set	EMC version	Internal hinge* set	SWB / SBG / SBGL Corr.protection	Allen lid screws	Silicone lid seal	Sealable lid screws in steel	Turn bolt fastener
TS 35												
186	160	10	1,5	•	•	•	•	•	•	•	•	•

Maximum number of cable glands to **DIN 50262***

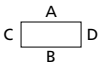

M	Corner dim.	Side A/B	Side C/D	PG	Corner dim.	Side A/B	Side C/D
12	17,25	45	45	7	17,25	45	45
16	25,30	22	18	9	21,85	28	28
20	27,60	18	17	11	25,30	20	18
25	37,95	8	8	13,5	27,60	18	17
32	48,30	6	5	16	31,05	15	12
40	60,95	3	3	21	37,95	8	8
50	69,00	2	2	29	48,30	5	4
63	74,75	2	2	36	60,95	3	3
				42	69,00	2	2
				48	74,75	2	2

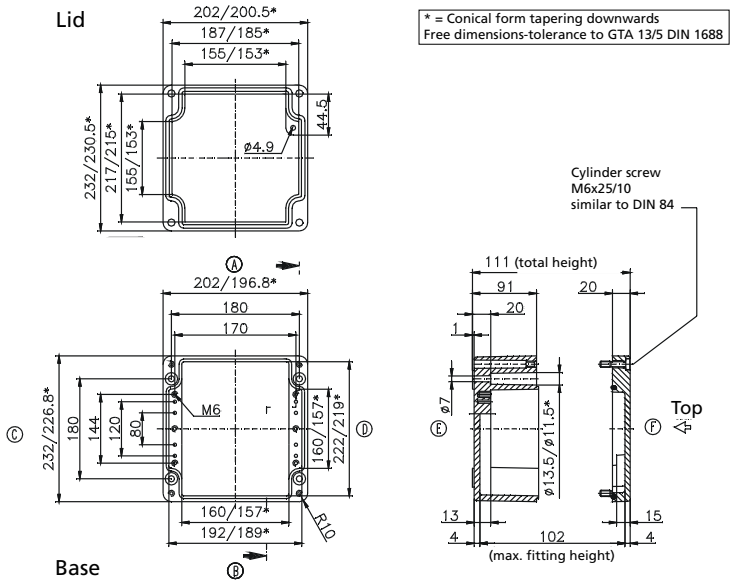

* Please quote mounting side

Type: **01.23 20 18** External dimensions: **232 x 202 x 181 mm** Weight: **4600 g**

DIN rail length in mm	max. fitting length in mm	Earthing rail clamp	Mounting plate (thickness in mm)	External mounting brackets	External hinge* set	EMC version	Internal hinge* set	SWB / SBG / SBGL Corr.protection	Allen lid screws	Silicone lid seal	Sealable lid screws in steel	Turn bolt fastener
TS 35												
186	160	10	1,5	•	•	•	•	•	•	•	•	•

Maximum number of cable glands to **DIN 50262***

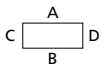

M	Corner dim.	Side A/B	Side C/D	PG	Corner dim.	Side A/B	Side C/D
12	17,25	90	81	7	17,25	90	81
16	25,30	42	36	9	21,85	56	49
20	27,60	33	33	11	25,30	42	36
25	37,95	18	16	13,5	27,60	33	33
32	48,30	10	9	16	31,05	25	25
40	60,95	6	6	21	37,95	16	16
50	69,00	5	5	29	48,30	10	9
63	74,75	4	4	36	60,95	6	5
				42	69,00	5	4
				48	74,75	4	4

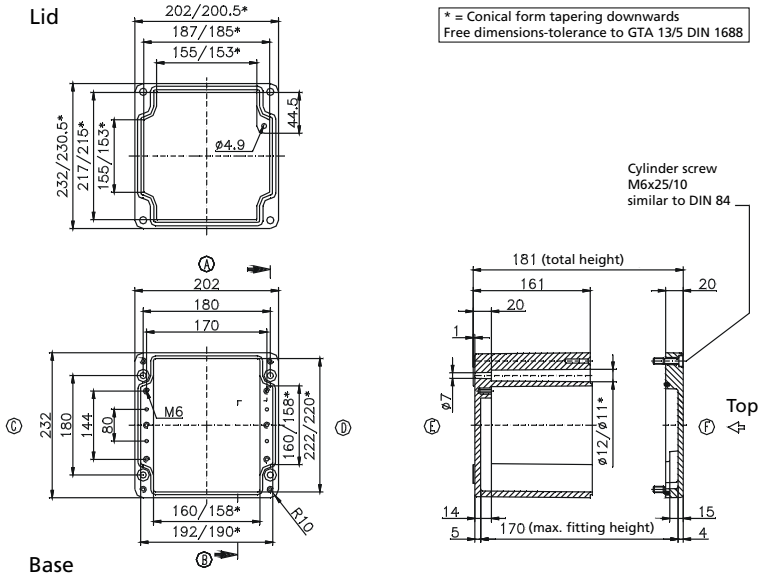

Type: **01.23 28 11** External dimensions: **230 x 280 x 111 mm** Weight: **3460 g**

DIN rail length in mm	max. fitting length in mm	Earthing rail clamp	Mounting plate (thickness in mm)	External mounting brackets	External hinge* set	EMC version	Internal hinge* set	SWB / SBG / SBGL Corr.protection	Allen lid screws	Silicone lid seal	Sealable lid screws in steel	Turn bolt fastener
TS 35												
264	240	16	1,5	•	•	•	•	•	•	•	•	•

Maximum number of cable glands to **DIN 50262***

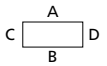

M	Corner dim.	Side A/B	Side C/D	PG	Corner dim.	Side A/B	Side C/D
12	17,25	70	45	7	17,25	68	45
16	25,30	32	18	9	21,85	44	28
20	27,60	24	17	11	25,30	32	18
25	37,95	12	8	13,5	27,60	24	17
32	48,30	9	5	16	31,05	21	12
40	60,95	4	3	21	37,95	12	8
50	69,00	3	2	29	48,30	9	4
63	74,75	3	2	36	60,95	4	3
				42	69,00	3	2
				48	74,75	3	2

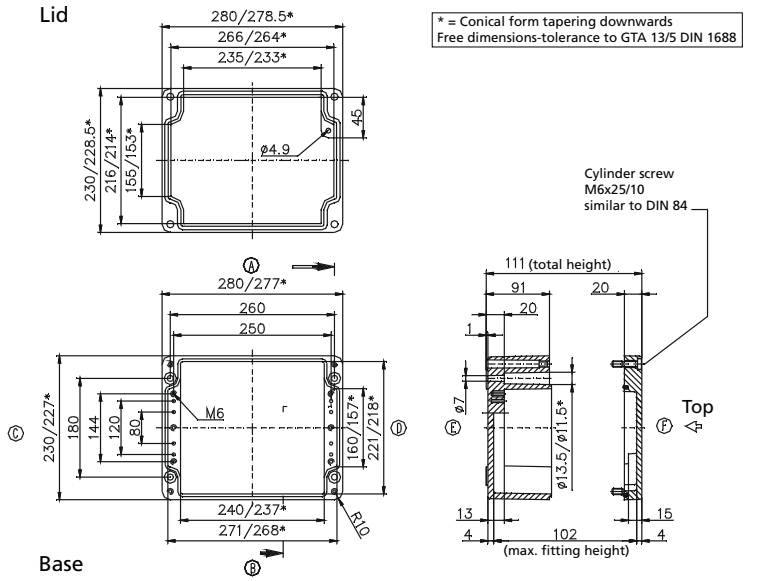

* Please quote mounting side

Type: **01.23 33 11** External dimensions: **230 x 330 x 111 mm** Weight: **3500 g**

DIN rail length in mm	max. fitting length in mm	Earthing rail clamp	Mounting plate (thickness in mm)	External mounting brackets	External hinge* set	EMC version	Internal hinge* set	SWB / SBG / SBGL Corr.protection	Allen lid screws	Silicone lid seal	Sealable lid screws in steel	Turn bolt fastener
TS 35												
314	290	21	1,5	•	•	•	•	•	•	•	•	•

Maximum number of cable glands to **DIN 50262***

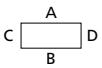

M	Corner dim.	Side A/B	Side C/D	PG	Corner dim.	Side A/B	Side C/D
12	17,25	84	45	7	17,25	81	45
16	25,30	42	18	9	21,85	52	28
20	27,60	30	17	11	25,30	38	18
25	37,95	15	8	13,5	27,60	30	17
32	48,30	11	5	16	31,05	27	12
40	60,95	5	3	21	37,95	15	8
50	69,00	4	2	29	48,30	11	4
63	74,75	4	2	36	60,95	5	3
				42	69,00	4	2
				48	74,75	4	2

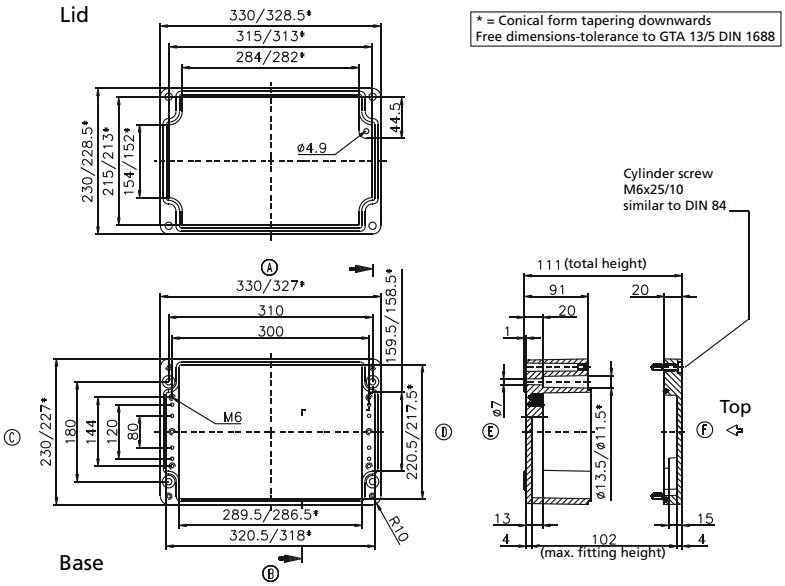

Type: **01.23 33 18** External dimensions: **230 x 330 x 181 mm** Weight: **6400 g**

DIN rail length in mm	max. fitting length in mm	Earthing rail clamp	Mounting plate (thickness in mm)	External mounting brackets	External hinge* set	EMC version	Internal hinge* set	SWB / SBG / SBGL Corr.protection	Allen lid screws	Silicone lid seal	Sealable lid screws in steel	Turn bolt fastener
TS 35												
314	290	21	1,5	•	•	•	•	•	•	•	•	•

Maximum number of cable glands to **DIN 50262***

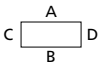

M	Corner dim.	Side A/B	Side C/D	PG	Corner dim.	Side A/B	Side C/D
12	17,25	165	81	7	17,25	144	81
16	25,30	77	36	9	21,85	104	49
20	27,60	60	33	11	25,30	77	36
25	37,95	30	16	13,5	27,60	60	33
32	48,30	18	9	16	31,05	45	25
40	60,95	11	6	21	37,95	30	16
50	69,00	8	5	29	48,30	18	9
63	74,75	8	4	36	60,95	11	5
				42	69,00	8	4
				48	74,75	8	4

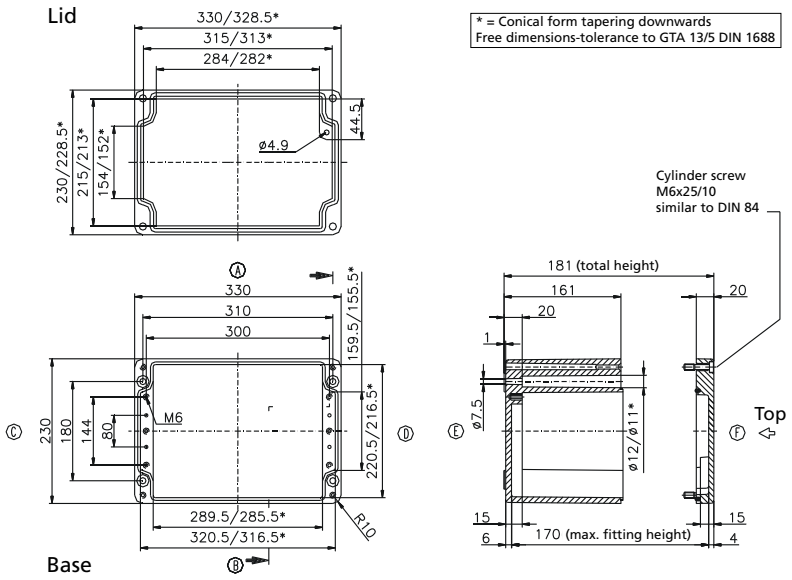

* Please quote mounting side

Type: **01.23 40 11** External dimensions: **230 x 400 x 111 mm** Weight: **4833 g**

DIN rail length in mm	max. fitting length in mm	Earthing rail clamp	Mounting plate (thickness in mm)	External mounting brackets	External hinge* set	EMC version	Internal hinge* set	SWB / SBG / SBGL Corr.protection	Allen lid screws	Silicone lid seal	Sealable lid screws in steel	Turn bolt fastener
TS 35												
381	360	25	2	•	•	•	•	•	•	•	•	•

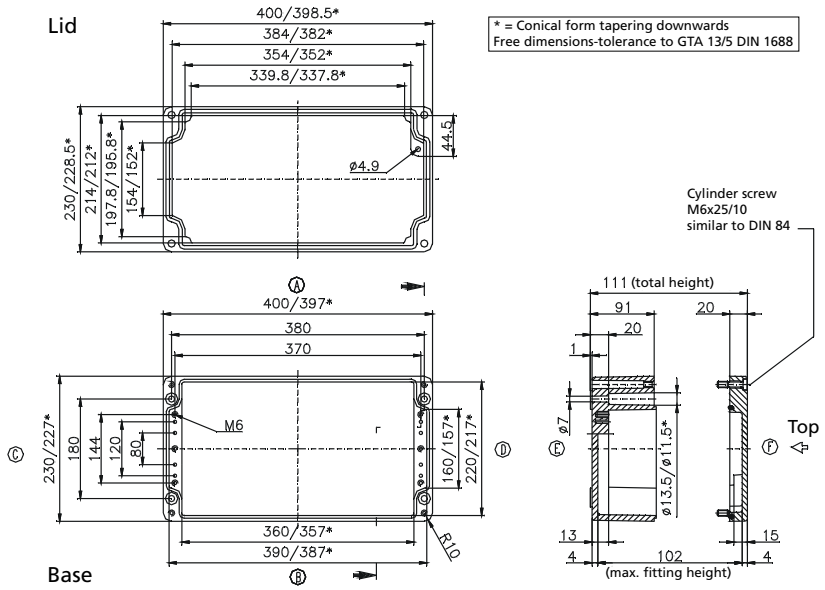

Maximum number of cable glands to **DIN 50262***

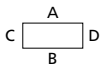

M	Corner dim.	Side A/B	Side C/D	PG	Corner dim.	Side A/B	Side C/D
12	17,25	103	45	7	17,25	103	45
16	25,30	50	18	9	21,85	64	28
20	27,60	39	17	11	25,30	46	18
25	37,95	20	8	13,5	27,60	39	17
32	48,30	14	5	16	31,05	33	12
40	60,95	6	3	21	37,95	18	8
50	69,00	5	2	29	48,30	13	4
63	74,75	5	2	36	60,95	6	3
				42	69,00	5	2
				48	74,75	5	2

Type: **01.23 40 23** External dimensions: **230 x 400 x 225 mm** Weight: **8300 g**

DIN rail length in mm	max. fitting length in mm	Earthing rail clamp	Mounting plate (thickness in mm)	External mounting brackets	External hinge* set	EMC version	Internal hinge* set	SWB / SBG / SBGL Corr.protection	Allen lid screws	Silicone lid seal	Sealable lid screws in steel	Turn bolt fastener
TS 35												
381	360	25	2	•	•	•	•	•	•	•	•	•

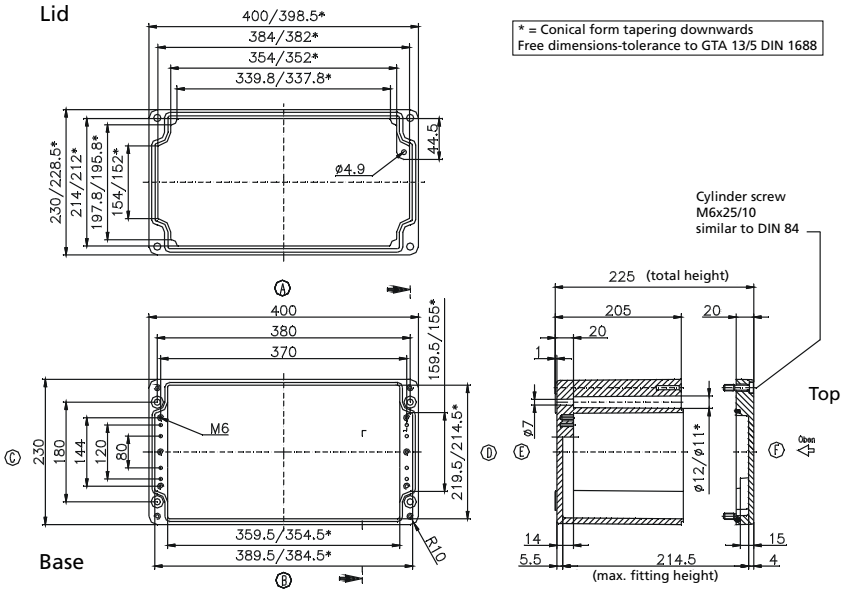

Maximum number of cable glands to **DIN 50262***

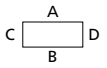

M	Corner dim.	Side A/B	Side C/D	PG	Corner dim.	Side A/B	Side C/D
12	17,25	240	108	7	17,25	240	108
16	25,30	122	48	9	21,85	160	63
20	27,60	100	44	11	25,30	112	48
25	37,95	54	21	13,5	27,60	100	44
32	48,30	30	13	16	31,05	77	35
40	60,95	18	9	21	37,95	54	21
50	69,00	15	6	29	48,30	30	13
63	74,75	12	5	36	60,95	18	6
				42	69,00	15	6
				48	74,75	12	5

* Please quote mounting side

Type: **01.23 60 11** External dimensions: **230 x 600 x 111 mm** Weight: **8700 g**

DIN rail length in mm	max. fitting length in mm	Earthing rail clamp	Mounting plate (thickness in mm)	External mounting brackets	External hinge* set	EMC version	Internal hinge* set	SWB / SBG / SBGL Corr.protection	Allen lid screws	Silicone lid seal	Sealable lid screws in steel	Turn bolt fastener
TS 35												
581	560	40	2	•	•	•	•	•	•	•	•	•

Maximum number of cable glands to **DIN 50262***

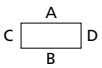

M	Corner dim.	Side A/B	Side C/D	PG	Corner dim.	Side A/B	Side C/D
12	17,25	150	43	7	17,25	150	43
16	25,30	72	18	9	21,85	96	28
20	27,60	54	17	11	25,30	68	18
25	37,95	28	8	13,5	27,60	54	15
32	48,30	20	4	16	31,05	28	12
40	60,95	10	3	21	37,95	28	8
50	69,00	8	2	29	48,30	20	4
63	74,75	6	2	36	60,95	10	2
				42	69,00	8	2
				48	74,75	6	2

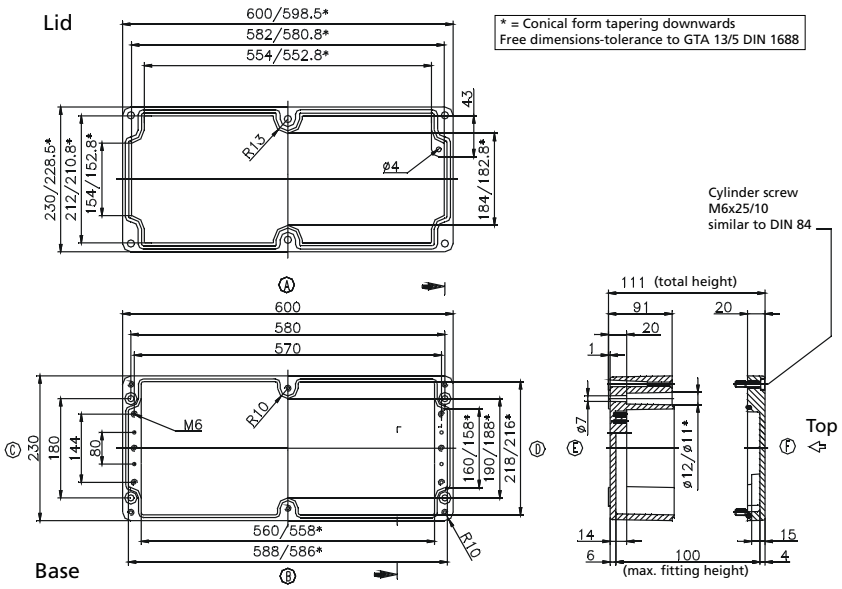

Type: **01.31 40 11** External dimensions: **313 x 404 x 111 mm** Weight: **6400 g**

DIN rail length in mm	max. fitting length in mm	Earthing rail clamp	Mounting plate (thickness in mm)	External mounting brackets	External hinge* set	EMC version	Internal hinge* set	SWB / SBG / SBGL Corr.protection	Allen lid screws	Silicone lid seal	Sealable lid screws in steel	Turn bolt fastener
TS 35												
381	360	25	2	•	•	•	•	•	•	•	•	•

Maximum number of cable glands to **DIN 50262***

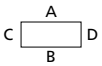

M	Corner dim.	Side A/B	Side C/D	PG	Corner dim.	Side A/B	Side C/D
12	17,25	105	68	7	17,25	103	68
16	25,30	50	28	9	21,85	64	42
20	27,60	39	26	11	25,30	46	27
25	37,95	20	12	13,5	27,60	39	24
32	48,30	14	7	16	31,05	33	18
40	60,95	6	4	21	37,95	18	12
50	69,00	5	3	29	48,30	13	7
63	74,75	5	3	36	60,95	6	4
				42	69,00	5	3
				48	74,75	5	3

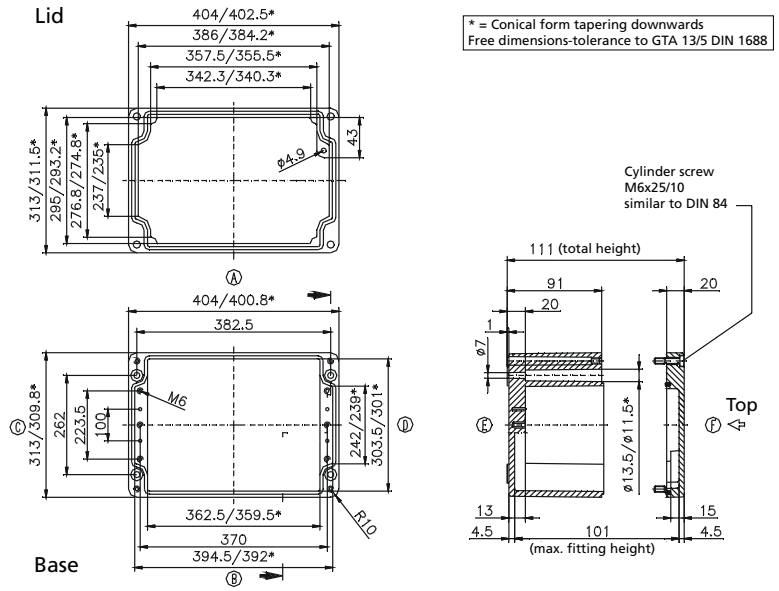

* Please quote mounting side

Type: **01.31 40 14** External dimensions: **312 x 403 x 141 mm** Weight: **9500 g**

DIN rail length in mm	max. fitting length in mm	Earthing rail clamp	Mounting plate (thickness in mm)	External mounting brackets	External hinge* set	EMC version	Internal hinge* set	SWB / SBG / SBGL Corr.protection	Allen lid screws	Silicone lid seal	Sealable lid screws in steel	Turn bolt fastener
TS 35												
381	360	25	2	•	•	•	•	•	•	•	•	•

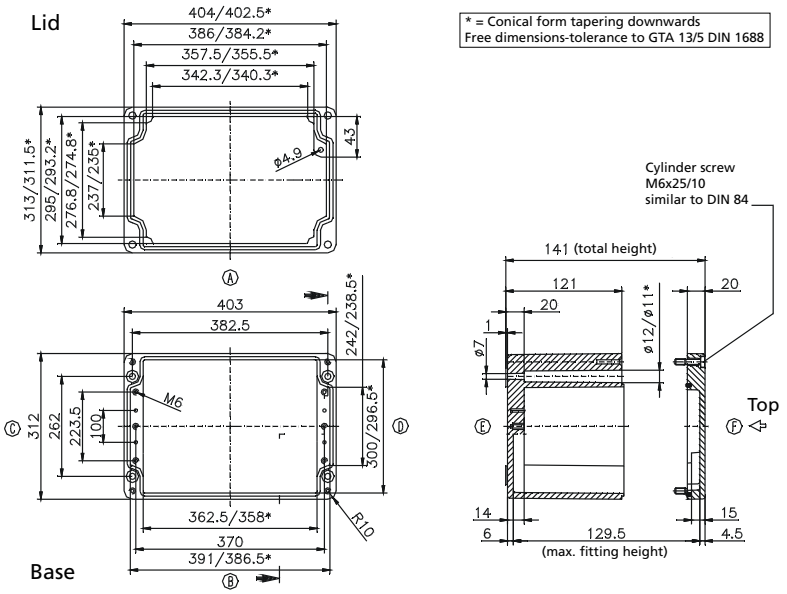

Maximum number of cable glands to **DIN 50262***

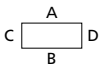

M	Corner dim.	Side A/B	Side C/D	PG	Corner dim.	Side A/B	Side C/D
12	17,25	147	95	7	17,25	147	95
16	25,30	70	43	9	21,85	96	55
20	27,60	55	32	11	25,30	70	40
25	37,95	28	18	13,5	27,60	55	32
32	48,30	17	10	16	31,05	44	28
40	60,95	12	7	21	37,95	27	18
50	69,00	7	4	29	48,30	17	10
63	74,75	6	3	36	60,95	12	7
				42	69,00	7	4
				48	74,75	6	3

Type: **01.31 40 18** External dimensions: **313 x 404 x 181 mm** Weight: **9780 g**

DIN rail length in mm	max. fitting length in mm	Earthing rail clamp	Mounting plate (thickness in mm)	External mounting brackets	External hinge* set	EMC version	Internal hinge* set	SWB / SBG / SBGL Corr.protection	Allen lid screws	Silicone lid seal	Sealable lid screws in steel	Turn bolt fastener
TS 35												
381	360	25	2	•	•	•	•	•	•	•	•	•

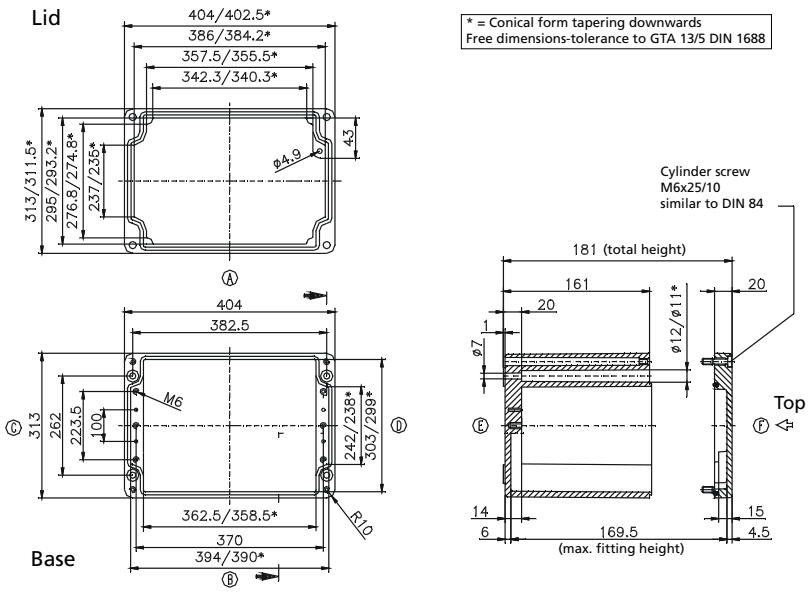

Maximum number of cable glands to **DIN 50262***

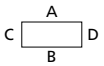

M	Corner dim.	Side A/B	Side C/D	PG	Corner dim.	Side A/B	Side C/D
12	17,25	205	122	7	17,25	205	122
16	25,30	98	54	9	21,85	128	77
20	27,60	78	51	11	25,30	98	54
25	37,95	40	24	13,5	27,60	75	48
32	48,30	22	15	16	31,05	60	38
40	60,95	15	9	21	37,95	38	24
50	69,00	11	6	29	48,30	22	15
63	74,75	8	6	36	60,95	14	8
				42	69,00	10	6
				48	74,75	10	6

* Please quote mounting side

Type: **01.31 40 23** External dimensions: **313 x 404 x 227 mm** Weight: **11000 g**

DIN rail length in mm	max. fitting length in mm	Earthing rail clamp	Mounting plate (thickness in mm)	External mounting brackets	External hinge* set	EMC version	Internal hinge* set	SWB / SBG / SBGL Corr.protection	Allen lid screws	Silicone lid seal	Sealable lid screws in steel	Turn bolt fastener
TS 35												
381	360	25	2	•	•	•	•	•	•	•	•	•

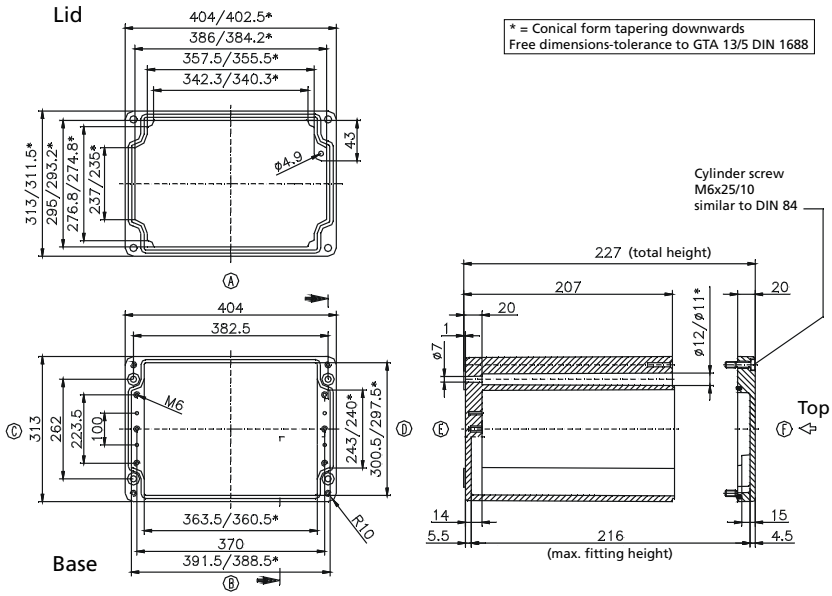

Maximum number of cable glands to **DIN 50262***

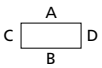

M	Corner dim.	Side A/B	Side C/D	PG	Corner dim.	Side A/B	Side C/D
12	17,25	246	162	7	17,25	246	162
16	25,30	126	72	9	21,85	160	99
20	27,60	100	68	11	25,30	112	72
25	37,95	54	33	13,5	27,60	100	64
32	48,30	30	20	16	31,05	77	53
40	60,95	18	12	21	37,95	54	33
50	69,00	15	9	29	48,30	30	20
63	74,75	12	8	36	60,95	18	12
				42	69,00	15	9
				48	74,75	14	8

Type: **01.31 60 11** External dimensions: **310 x 600 x 111 mm** Weight: **10160 g**

DIN rail length in mm	max. fitting length in mm	Earthing rail clamp	Mounting plate (thickness in mm)	External mounting brackets	External hinge* set	EMC version	Internal hinge* set	SWB / SBG / SBGL Corr.protection	Allen lid screws	Silicone lid seal	Sealable lid screws in steel	Turn bolt fastener
TS 35												
581	560	40	2	•	•	•	•	•	•	•	•	•

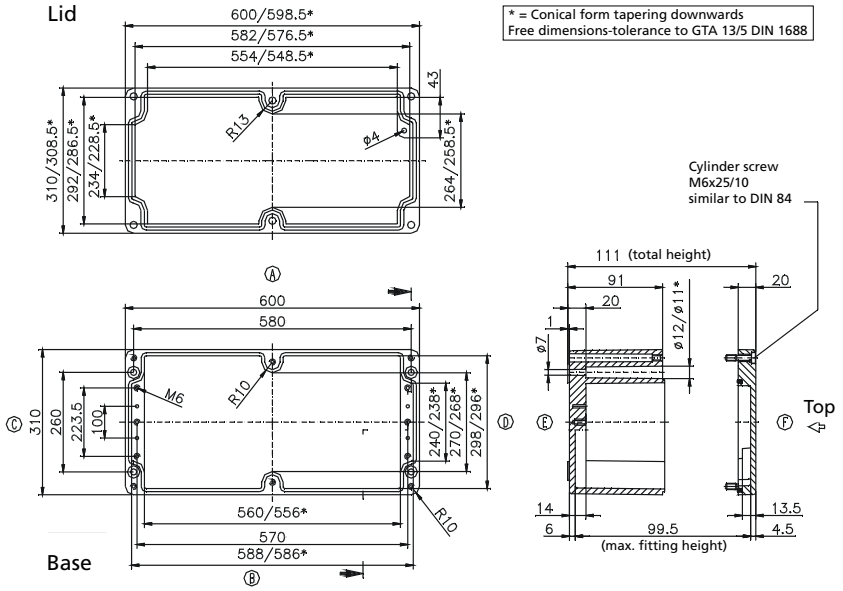

Maximum number of cable glands to **DIN 50262***

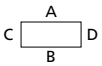

M	Corner dim.	Side A/B	Side C/D	PG	Corner dim.	Side A/B	Side C/D
12	17,25	150	68	7	17,25	150	68
16	25,30	76	28	9	21,85	96	42
20	27,60	60	24	11	25,30	72	27
25	37,95	30	12	13,5	27,60	60	24
32	48,30	20	7	16	31,05	48	18
40	60,95	10	4	21	37,95	28	12
50	69,00	8	3	29	48,30	20	6
63	74,75	6	3	36	60,95	10	4
				42	69,00	8	3
				48	74,75	6	3

* Please quote mounting side

Type: **01.31 60 18** External dimensions: **310 x 600 x 181 mm** Weight: **12560 g**

DIN rail length in mm	max. fitting length in mm	Earthing rail clamp	Mounting plate (thickness in mm)	External mounting brackets	External hinge* set	EMC version	Internal hinge* set	SWB / SBG / SBGL Corr.protection	Allen lid screws	Silicone lid seal	Sealable lid screws in steel	Turn bolt fastener
TS 35												
581	560	40	2	•	•	•	•	•	•	•	•	•

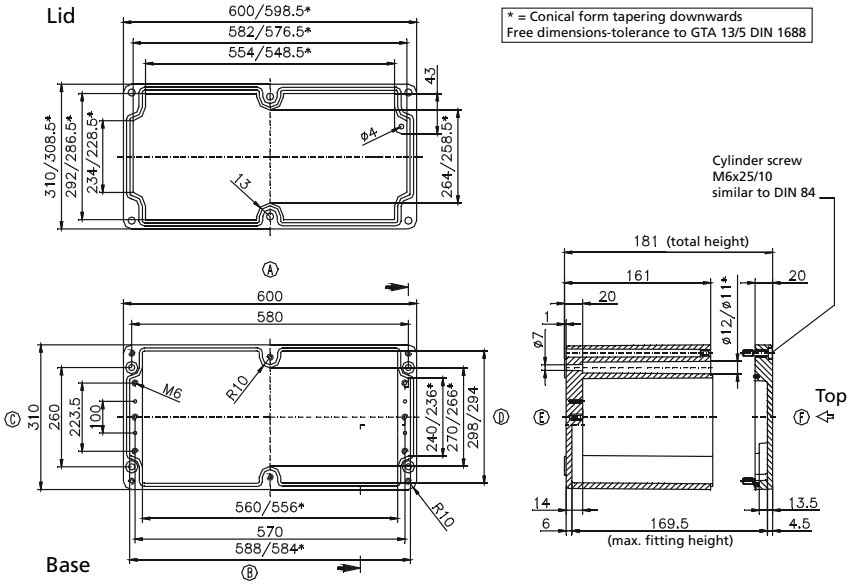

Maximum number of cable glands to **DIN 50262***

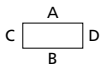

M	Corner dim.	Side A/B	Side C/D	PG	Corner dim.	Side A/B	Side C/D
12	17,25	270	122	7	17,25	270	122
16	25,30	140	54	9	21,85	184	74
20	27,60	108	48	11	25,30	134	54
25	37,95	56	24	13,5	27,60	108	48
32	48,30	32	15	16	31,05	84	35
40	60,95	22	9	21	37,95	56	24
50	69,00	16	6	29	48,30	32	15
63	74,75	12	6	36	60,95	22	8
				42	69,00	16	6
				48	74,75	12	6

* Please quote mounting side

Type: **01.60 60 20** External dimensions: **600 x 600 x 202 mm** Weight: **26200 g**

DIN rail length in mm	max. fitting length in mm	Earthing rail clamp	Mounting plate (thickness in mm)	External mounting brackets	External hinge* set	EMC version	Internal hinge* set	SWB / SBG / SBGL Corr.protection	Allen lid screws	Silicone lid seal	Sealable lid screws in steel	Turn bolt fastener
TS 35												
575	552		2,5					•		•		

Maximum number of cable glands to **DIN 50262***

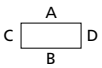

M	Corner dim.	Side A/B	Side C/D	PG	Corner dim.	Side A/B	Side C/D
12	17,25	270	270	7	17,25	270	270
16	25,30	140	140	9	21,85	184	184
20	27,60	108	108	11	25,30	134	134
25	37,95	56	56	13,5	27,60	108	108
32	48,30	32	32	16	31,05	84	84
40	60,95	22	22	21	37,95	56	56
50	69,00	16	16	29	48,30	32	32
63	74,75	12	12	36	60,95	18	18
				42	69,00	12	12
				48	74,75	12	12

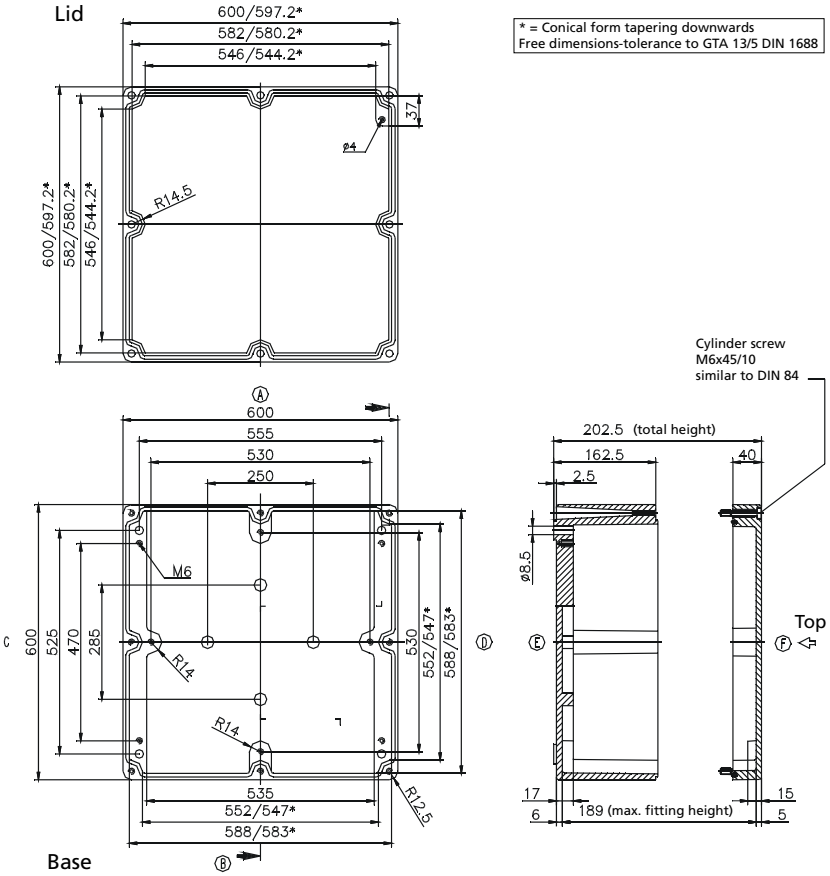

* Please quote mounting side